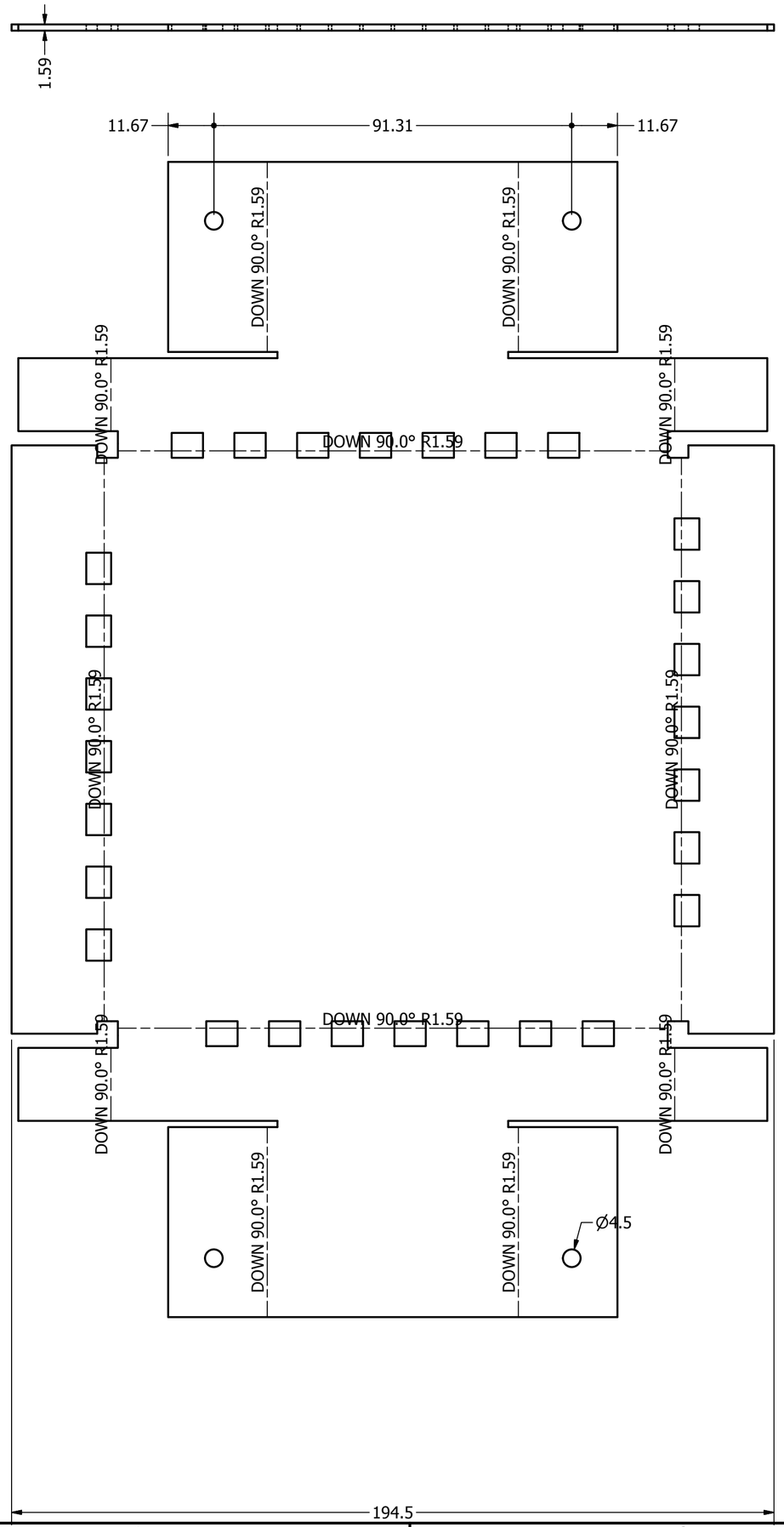

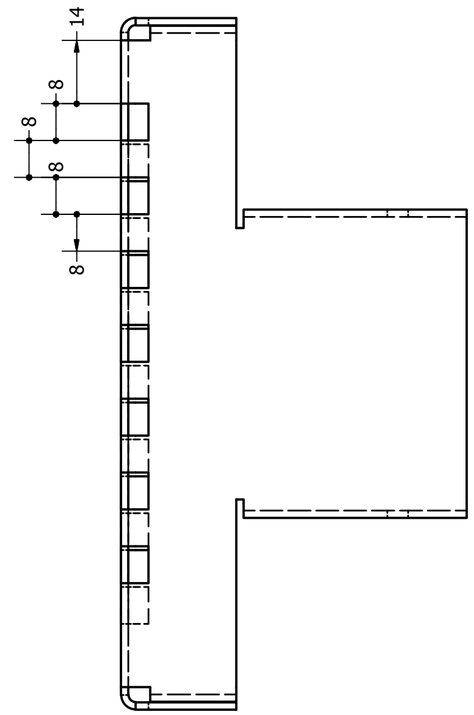

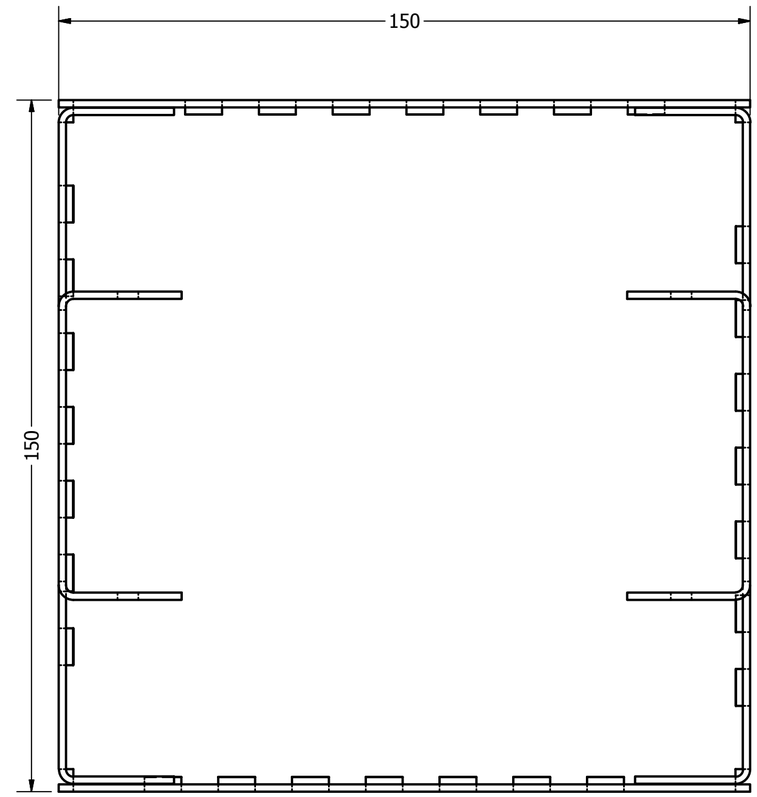

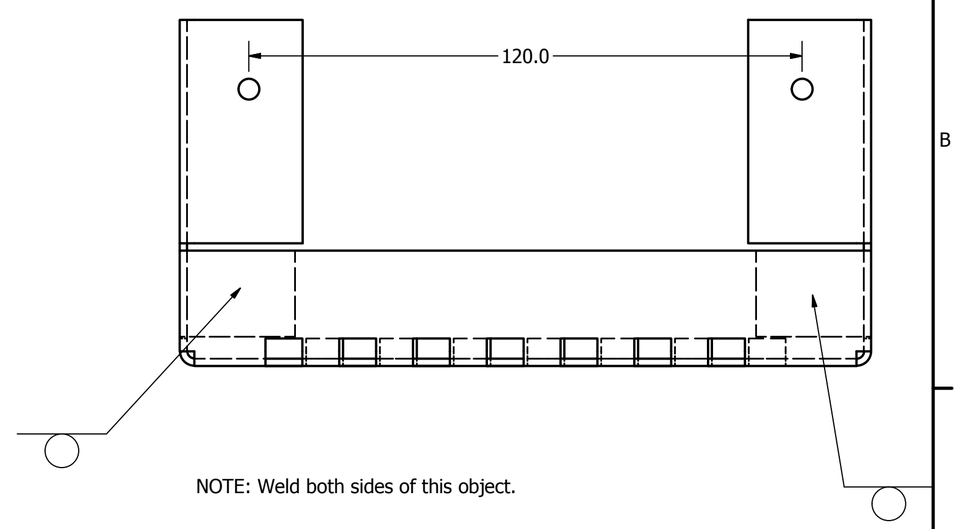

NOTE: Weld both sides of this object.

DRAWN Jay Lin	5/20/2016	Material: 1/16" aluminum Quantity: 1 Units: millimeters
CHECKED		TITLE
QA		
MFG		Bed
APPROVED		
		SIZE C / DWG NO bed / REV 1.0
		SCALE / SHEET 1 OF 1