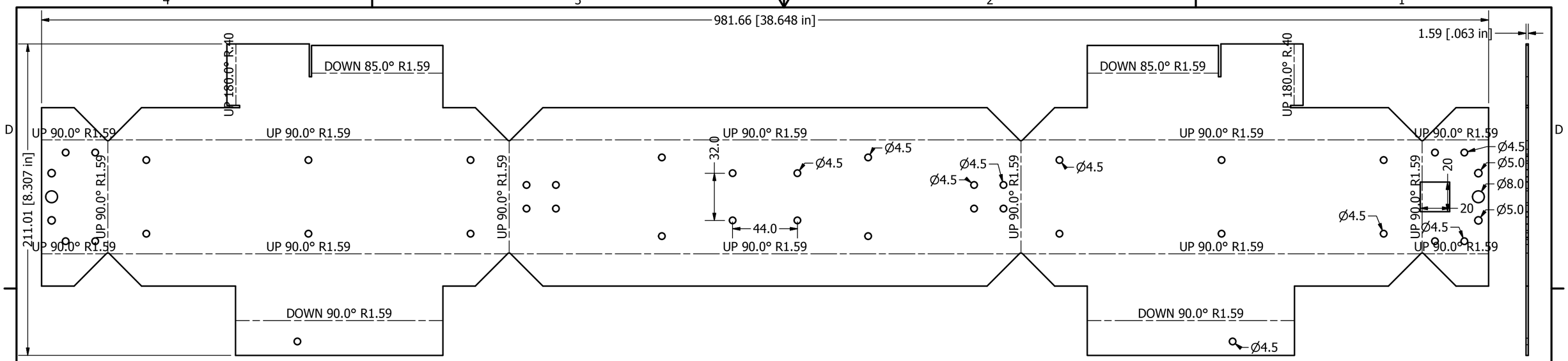

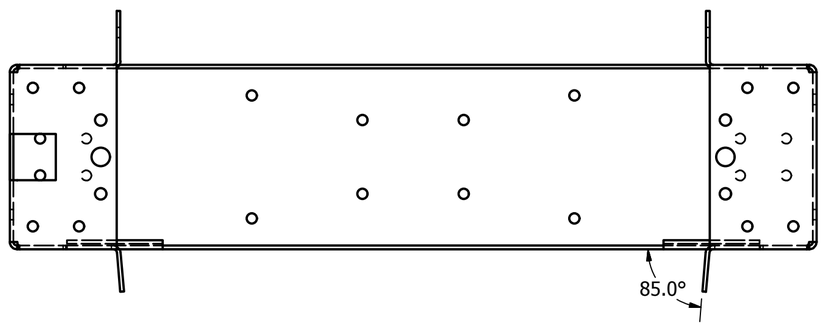

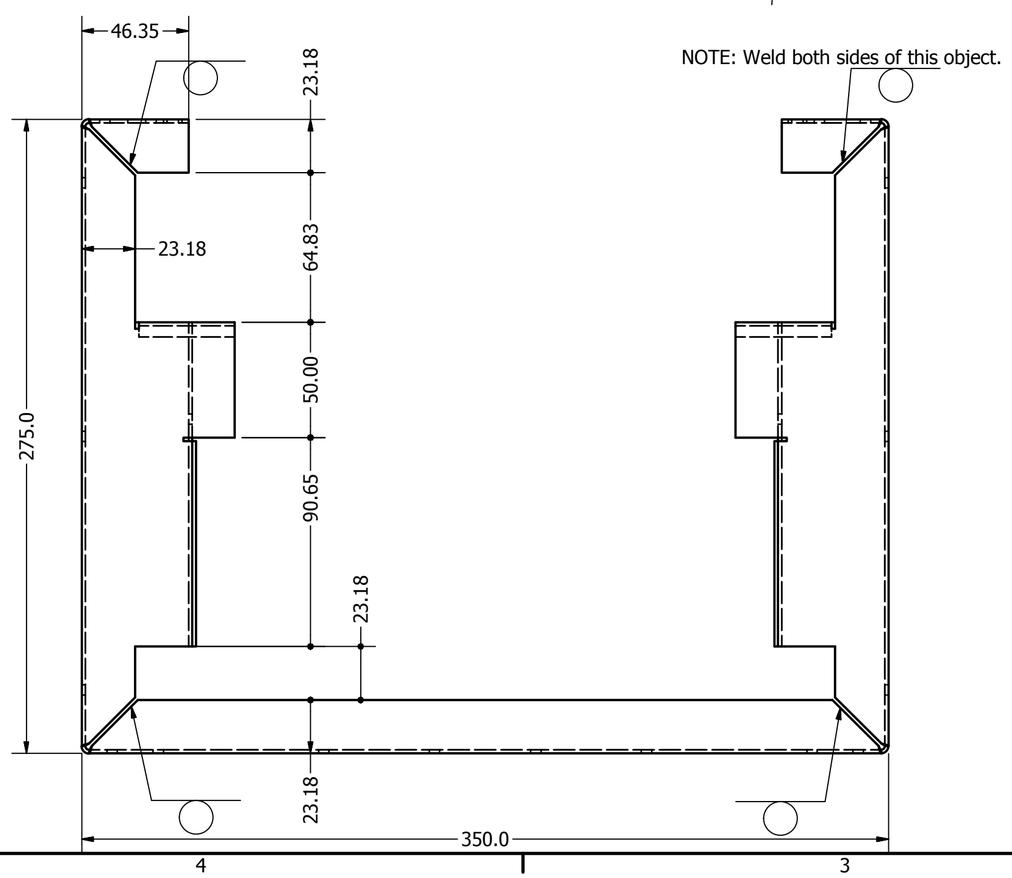

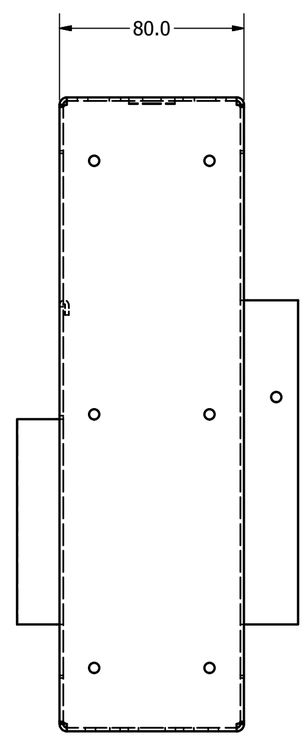

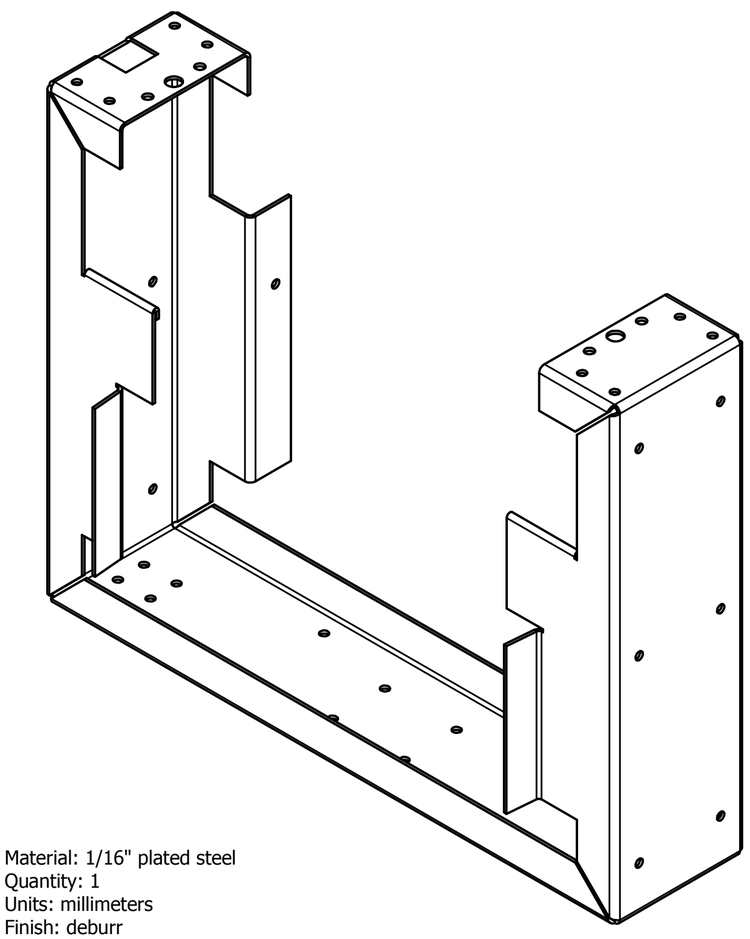

Material: 1/16" plated steel
Quantity: 1
Units: millimeters
Finish: deburr

DRAWN Jay Lin	5/20/2016	
CHECKED		TITLE frame_lower
QA		
MFG		
APPROVED		SIZE C / DWG NO frame_lower / REV 1.0
		SCALE / SHEET 1 OF 1