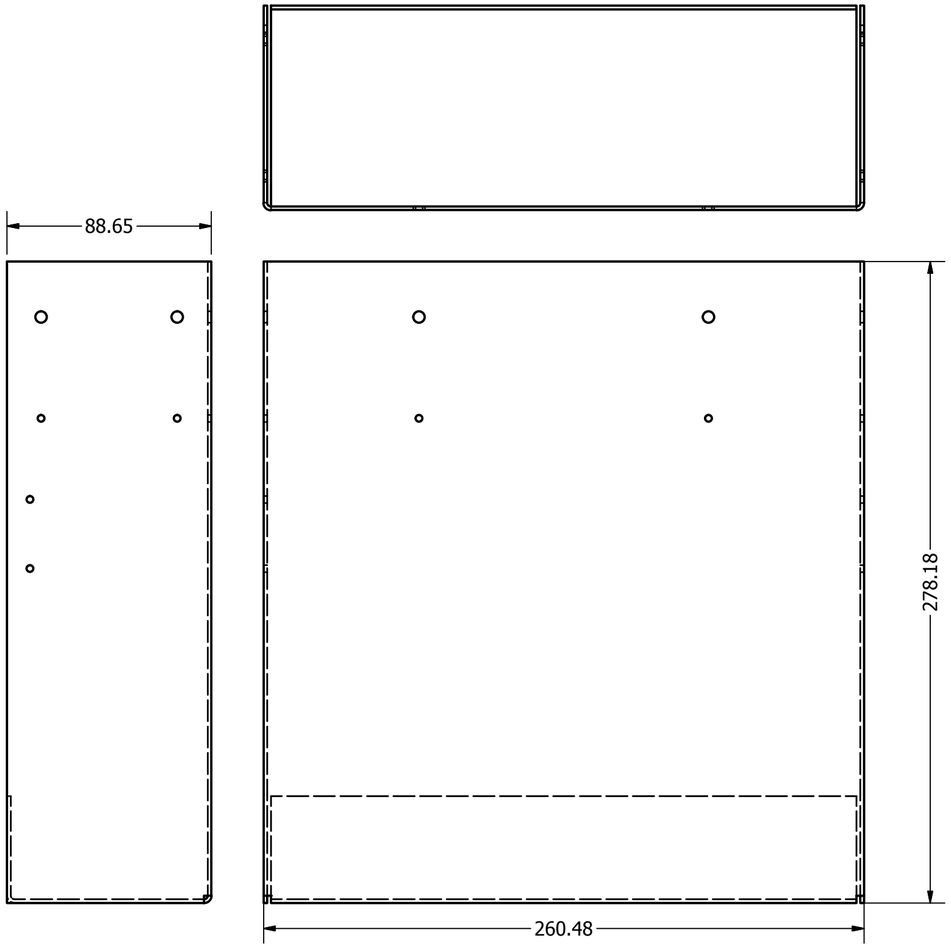

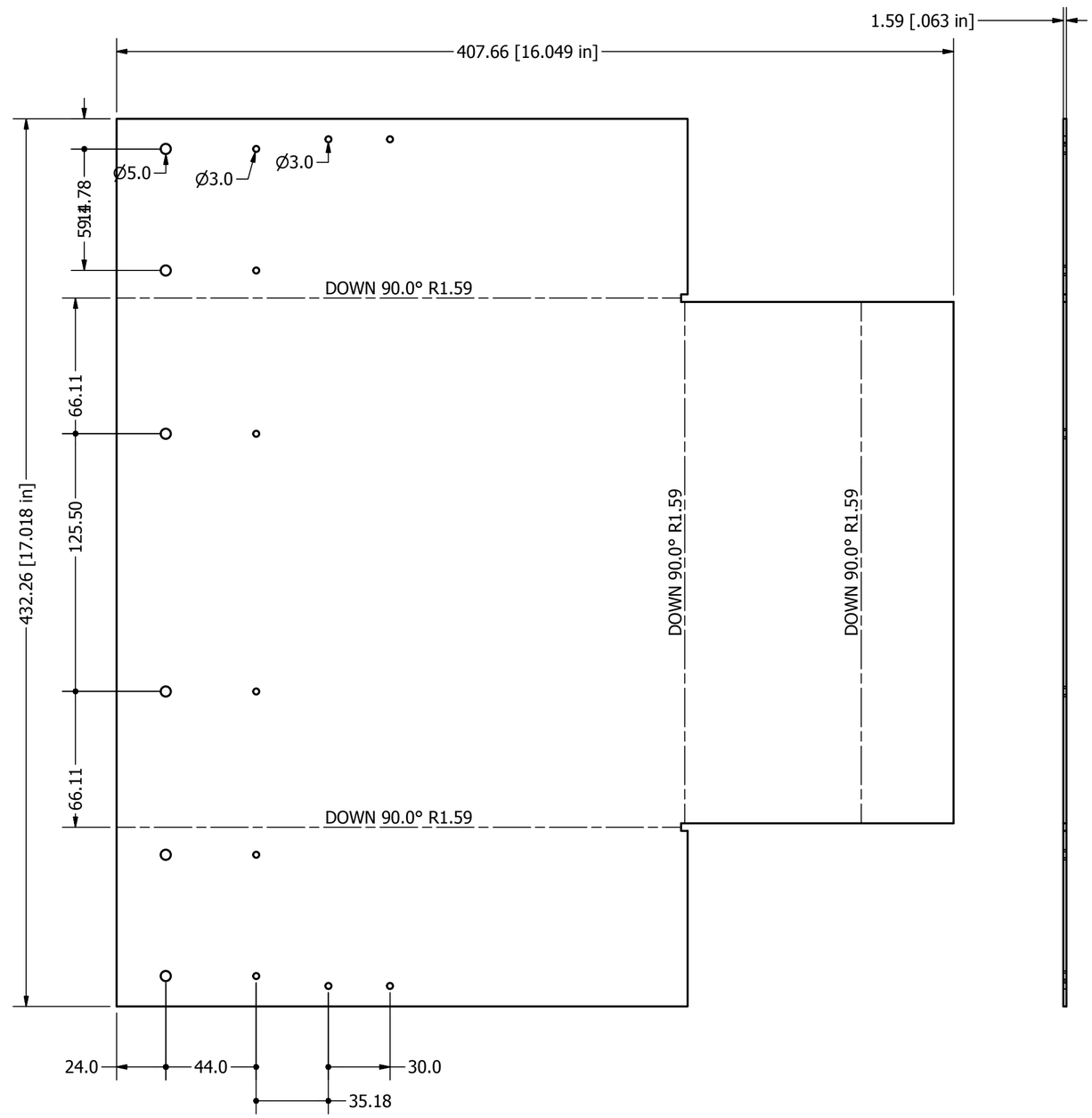

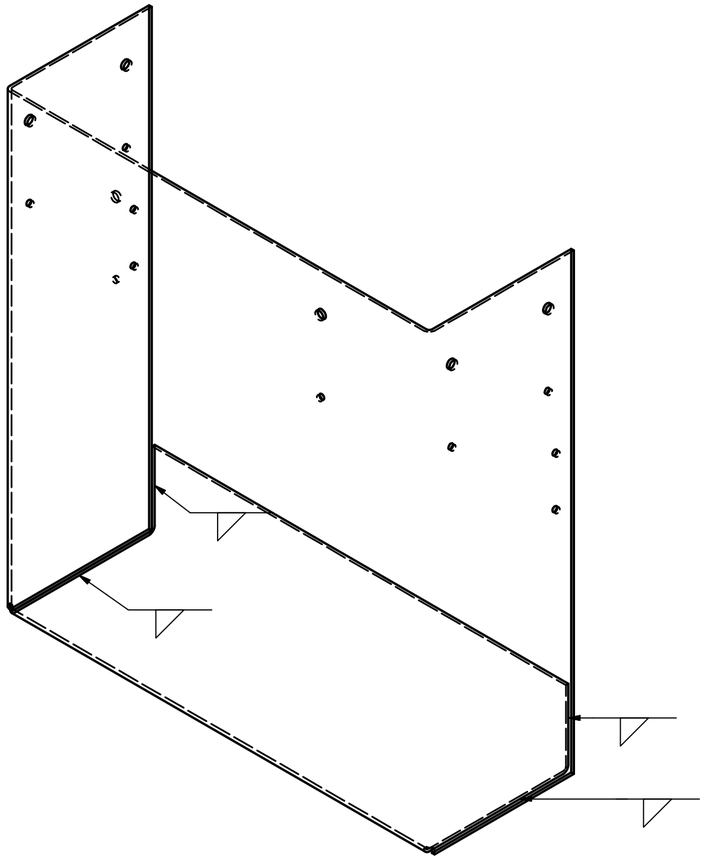

NOTE: Weld the corners to prevent light from escaping. Welds must not prevent object exterior from being flush.

DRAWN Jay	5/20/2016	Material: 1/16" Aluminum Quantity: 1 Units: millimeters
CHECKED		TITLE
QA		Drawer
MFG		
APPROVED		SIZE C / DWG NO drawer / REV 1.0
		SCALE / SHEET 1 OF 1