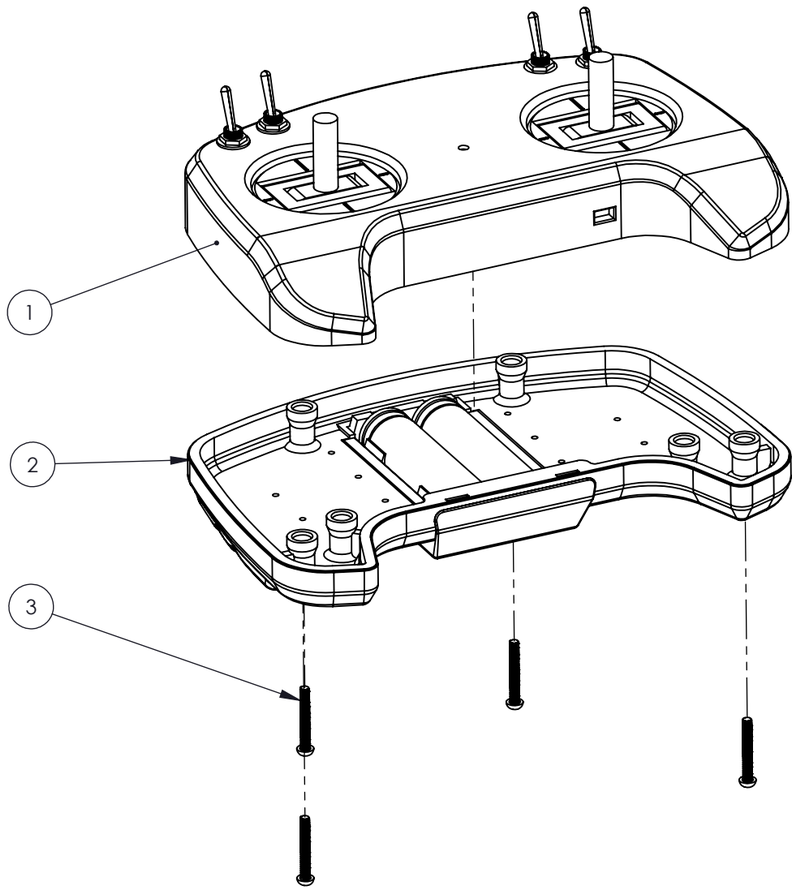

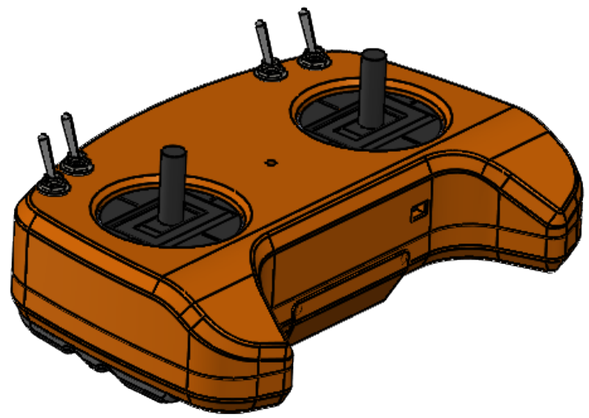

ITEM NO.	NUMBER	REV	DESCRIPTION	SPECIFICATION	MATERIAL	QTY.
3	m3x22					4
2	Assem 3 - Bottomtray HW assembly REV-A					1
1	Assem3 - Uppertray HW assembly REV-A					1

UNLESS OTHERWISE SPECIFIED:
DIMENSIONS ARE IN MILLIMETERS
SURFACE FINISH:
TOLERANCES:
LINEAR:
ANGULAR:

FINISH:

DEBURR AND BREAK SHARP EDGES

DO NOT SCALE DRAWING

REVISION

	NAME	SIGNATURE	DATE
DRAWN			
CHK'D			
APPV'D			
MFG			
Q.A			

TITLE:

MATERIAL:

WEIGHT:

DWG NO. Assem3 REV-A

A3

SCALE:1:2

SHEET 1 OF 1