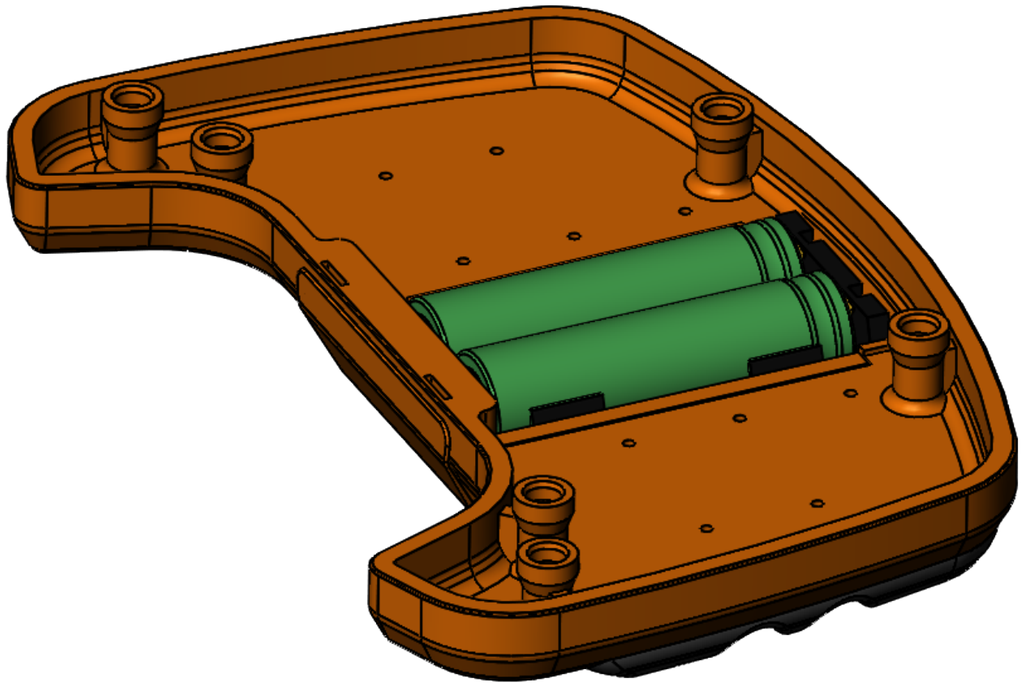

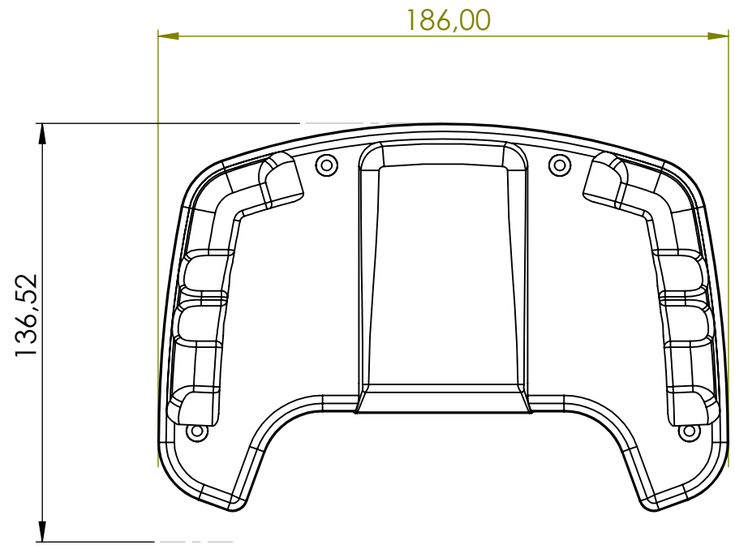

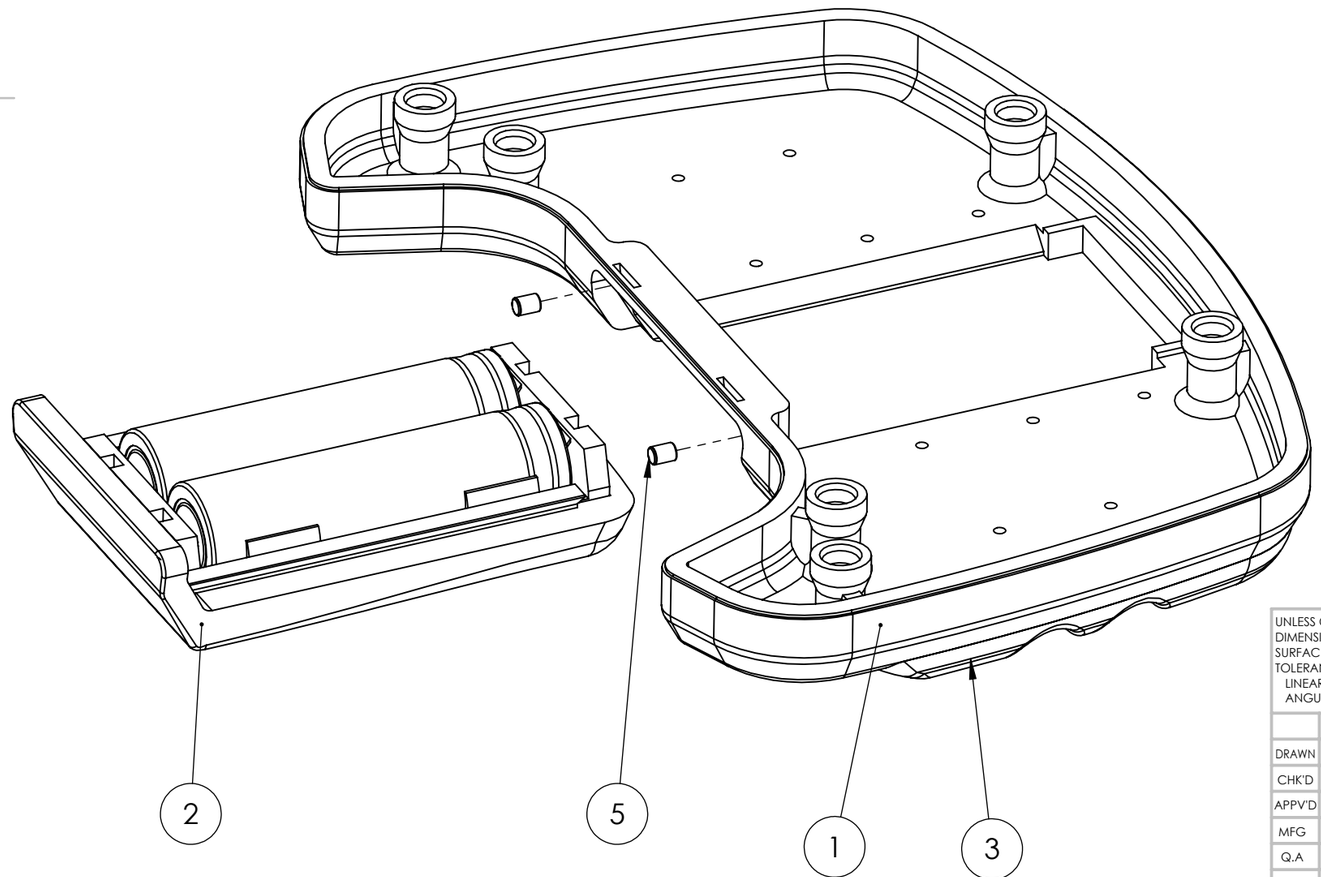

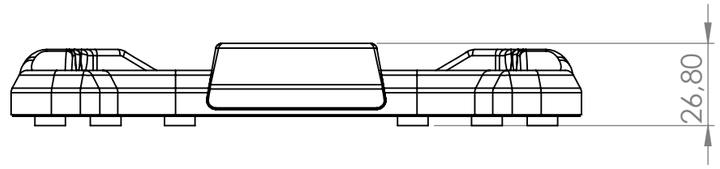

ITEM NO.	NUMBER	REV	DESCRIPTION	SPECIFICATION	MATERIAL	QTY.
5	Magnet D3x4					2
4	Mirrorside panels		Optional part		Material <not specified>	1
3	side panels		Optional part			1
2	Battery sledge REV-A					1
1	Rear_Shell REV-A					1

UNLESS OTHERWISE SPECIFIED:
DIMENSIONS ARE IN MILLIMETERS
SURFACE FINISH:
TOLERANCES:
LINEAR:
ANGULAR:

FINISH:

DEBURR AND BREAK SHARP EDGES

DO NOT SCALE DRAWING

REVISION

	NAME	SIGNATURE	DATE
DRAWN			
CHK'D			
APPV'D			
MFG			
Q.A			

TITLE:

MATERIAL:

DWG NO.

Assem 3 - Bottomtray HW assem

A3

WEIGHT:

SCALE:1:2

SHEET 1 OF 1