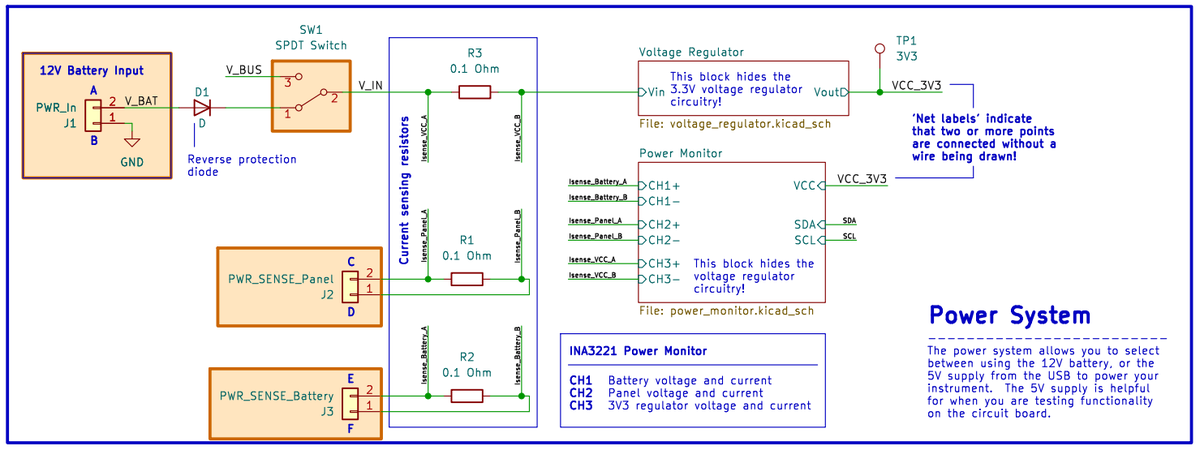

Power System

The power system allows you to select between using the 12V battery, or the 5V supply from the USB to power your instrument. The 5V supply is helpful for when you are testing functionality on the circuit board.

Adafruit Feather M0 Adalogger

The Adafruit Feather M0 Adalogger is the 'brain' of the sensor kit and is responsible for the timing of measurements, reading values from the temperature sensors and writing these to an SD card.

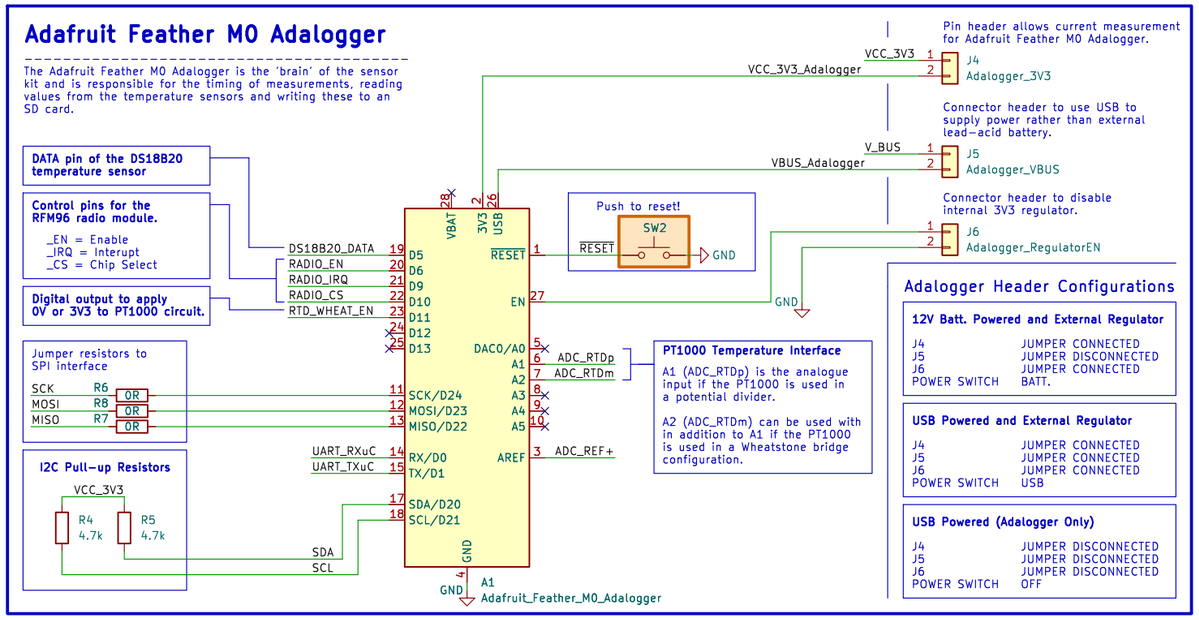

Adalogger Header Configurations

12V Batt. Powered and External Regulator

J4	JUMPER CONNECTED
J5	JUMPER DISCONNECTED
J6	JUMPER CONNECTED
POWER SWITCH	BATT.

USB Powered and External Regulator

J4	JUMPER CONNECTED
J5	JUMPER CONNECTED
J6	JUMPER CONNECTED
POWER SWITCH	USB

USB Powered (Adalogger Only)

J4	JUMPER DISCONNECTED
J5	JUMPER DISCONNECTED
J6	JUMPER DISCONNECTED
POWER SWITCH	OFF

Sensors and Peripherals

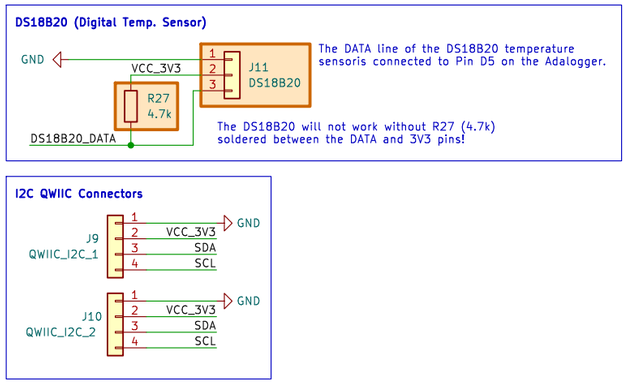

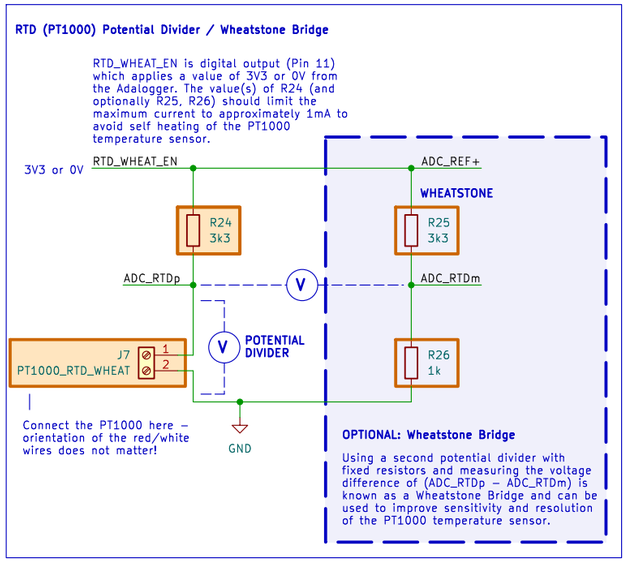

Radio and Serial Communications

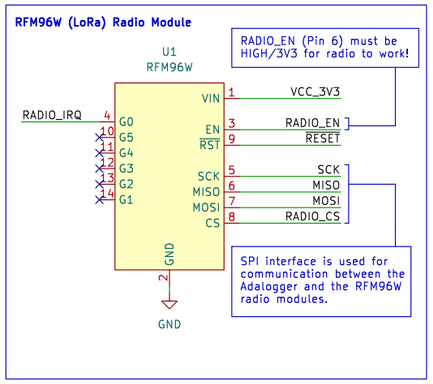

USB Debug Port

The USB DEBUG port provides an additional USB serial port for the sensor kit which can still be used when the Adalogger is not powered by its USB connection, or when you are using the Adalogger in SLEEP mode.

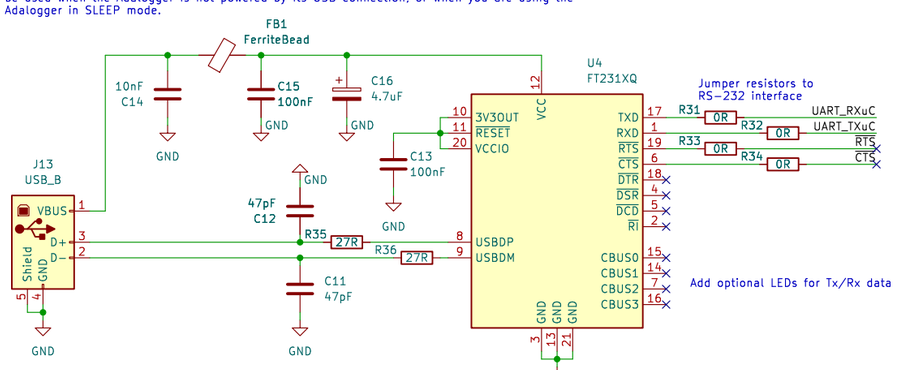

This circuitry is taken from the FT21XQ datasheet (Section 6.1)
https://ftdichip.com/wp-content/uploads/2021/10/DS_FT231X.pdf

PCB Soldering Help

Any components that are highlighted with an orange box and background do not comefitted to the PCB and you will need to solder these yourself. Check them off the schematic as you go to make sure you've done all of them!

Mechanical Symbols

KiCAD requires that you include mechanical features of the circuit, such as mounting holes and fiducial marks (for alignment of the PCB during manufacture) on the schematic. This is used to tell the PCB editor what sized hole or marking should be used.

Contact: hawkinsj22@cardiff.ac.uk
Auth: J. D. Hawkins, L. Craw, M. Prior-Jones
Cardiff University & CryoSkills Organising Committee

Sheet: /
File: cryoskills_sensor_kit.kicad_sch

Title: CryoSkills Sensor Kit

Size: A3	Date: 2024-03-19	**Rev: 1.1**
KiCad E.D.A. kicad 7.0.8		Id: 1/3