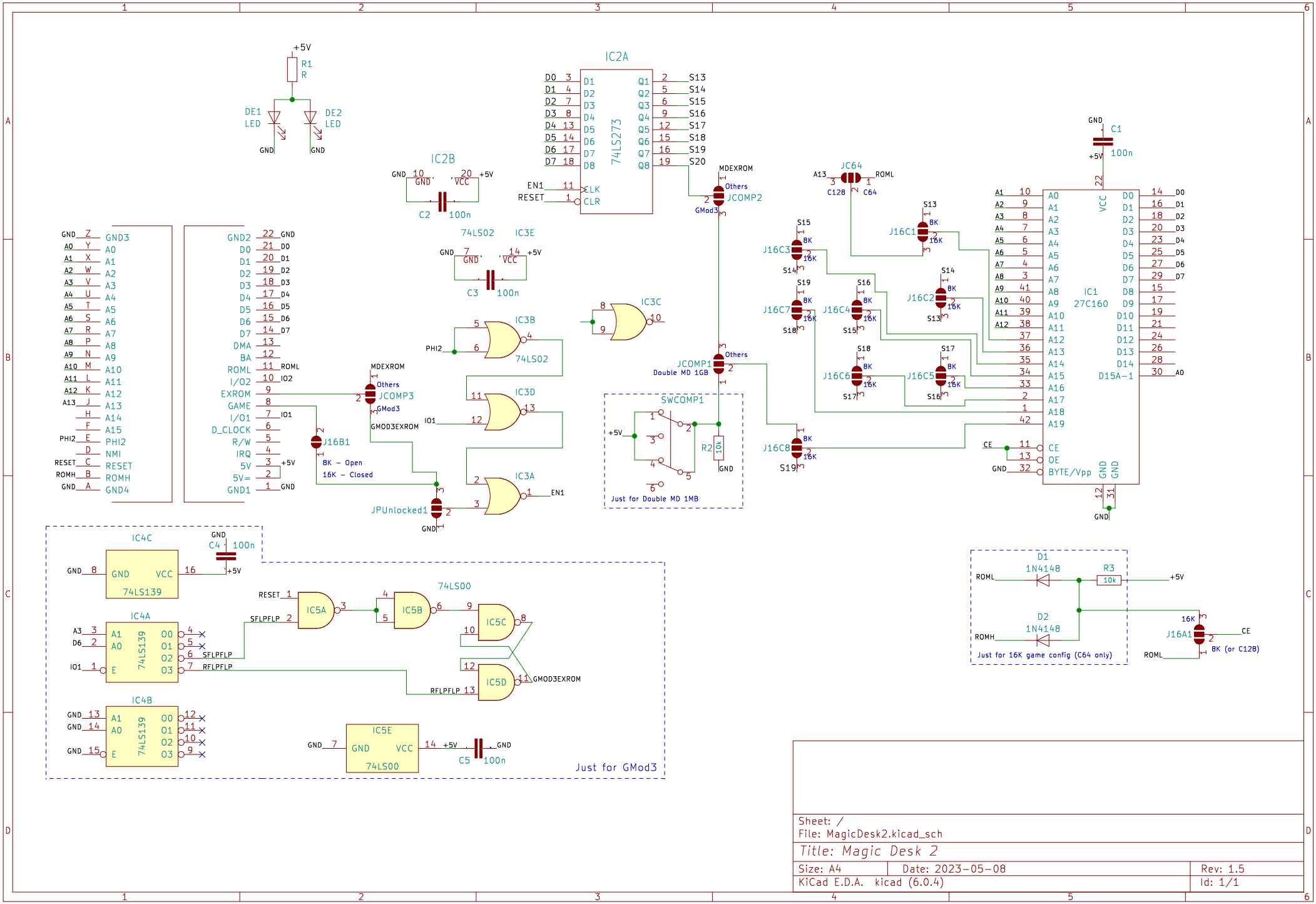
IC2A
74LS273
IC2B
74LS02
IC3E
IC3B
IC3C
IC3D
IC3A
IC1
27C160
IC4C
74LS139
IC4A
IC4B
IC5A
IC5B
IC5C
IC5D
IC5E
74LS00
SWCOMP1
Just for Double MD 1MB
Just for GMod3
Just for 16K game config (C64 only)
Sheet: /
File: MagicDesk2.kicad_sch
Title: Magic Desk 2
Size: A4
Date: 2023-05-08
Rev: 1.5
KiCad E.D.A. kicad (6.0.4)
Id: 1/1