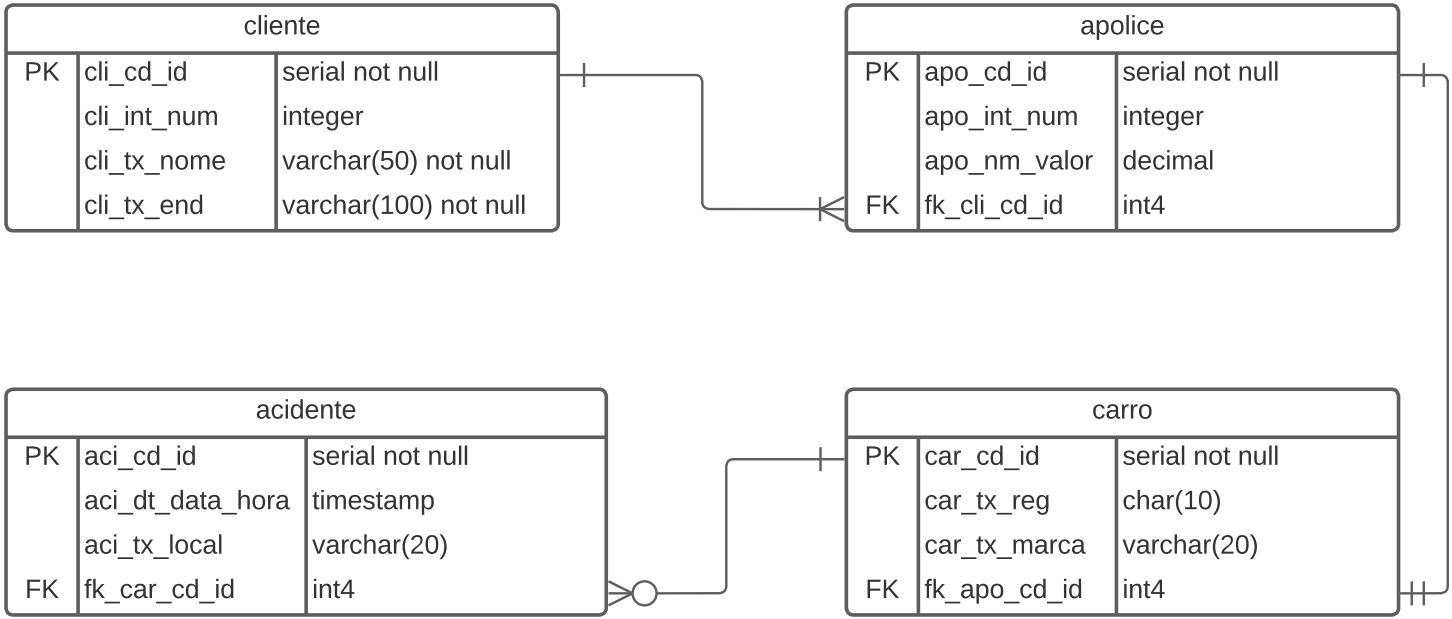
cliente
PK cli_cd_id serial not null
cli_int_num integer
cli_tx_nome varchar(50) not null
cli_tx_end varchar(100) not null
apolice
PK apo_cd_id serial not null
apo_int_num integer
apo_nm_valor decimal
FK fk_cli_cd_id int4
acidente
PK aci_cd_id serial not null
aci_dt_data_hora timestamp
aci_tx_local varchar(20)
FK fk_car_cd_id int4
carro
PK car_cd_id serial not null
car_tx_reg char(10)
car_tx_marca varchar(20)
FK fk_apo_cd_id int4