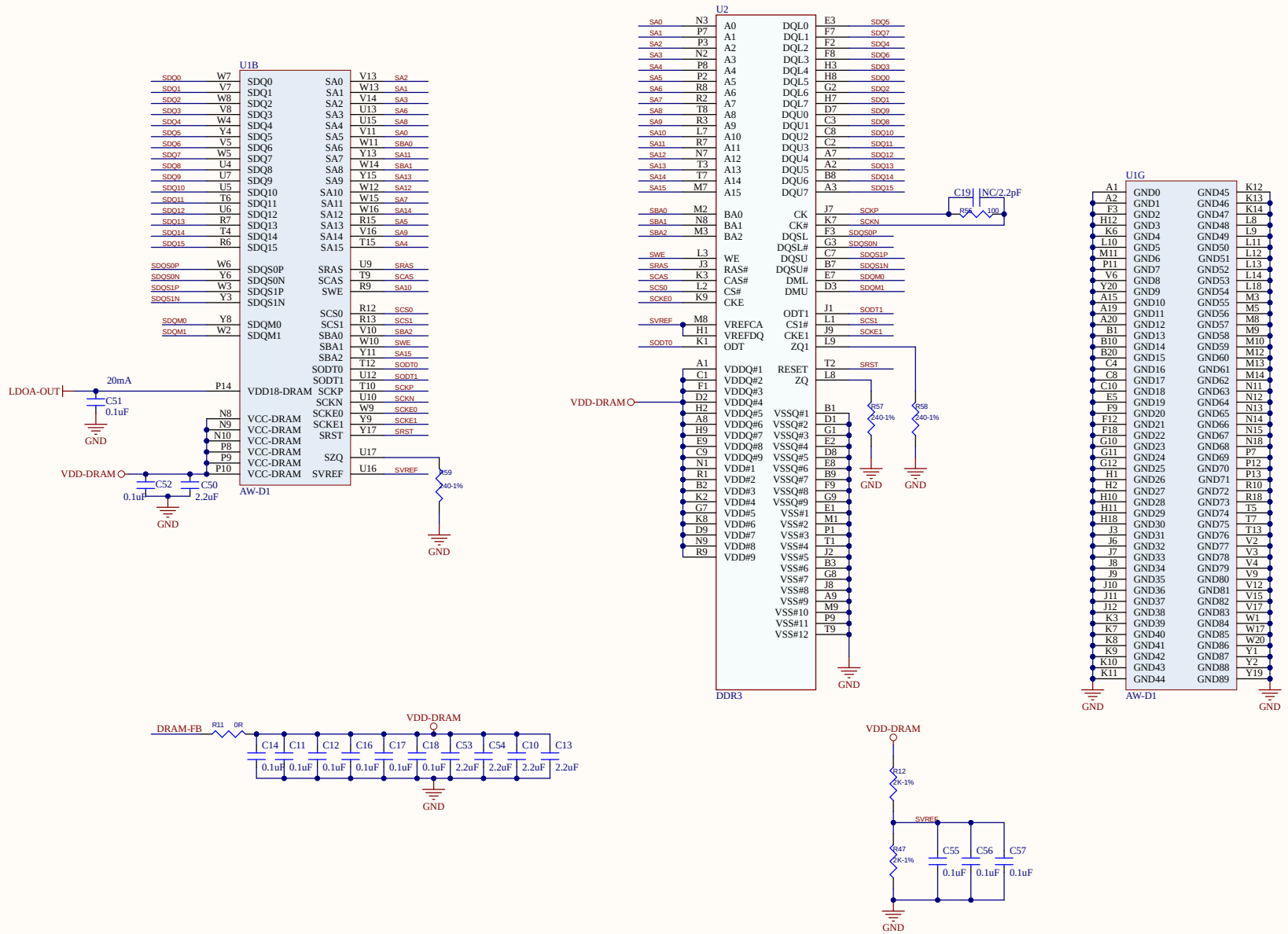
U1B
SDQ0 W7 SDQ0 SA0 V13 SA2
SDQ1 V7 SDQ1 SA1 W13 SA1
SDQ2 W8 SDQ2 SA2 V14 SA3
SDQ3 V8 SDQ3 SA3 U13 SA6
SDQ4 W4 SDQ4 SA4 U15 SA8
SDQ5 Y4 SDQ5 SA5 V11 SA0
SDQ6 V5 SDQ6 SA6 W11 SBA0
SDQ7 W5 SDQ7 SA7 Y13 SA11
SDQ8 U4 SDQ8 SA8 W14 SBA1
SDQ9 U7 SDQ9 SA9 Y15 SA13
SDQ10 U5 SDQ10 SA10 W12 SA12
SDQ11 T6 SDQ11 SA11 W15 SA7
SDQ12 U6 SDQ12 SA12 W16 SA14
SDQ13 R7 SDQ13 SA13 R15 SA5
SDQ14 T4 SDQ14 SA14 V16 SA9
SDQ15 R6 SDQ15 SA15 T15 SA4
SDQS0P W6 SDQS0P SRAS U9 SRAS
SDQS0N Y6 SDQS0N SCAS T9 SCAS
SDQS1P W3 SDQS1P SWE R9 SA10
SDQS1N Y3 SDQS1N
SCS0 R12 SCS0
SDQM0 Y8 SDQM0 SCS1 R13 SCS1
SDQM1 W2 SDQM1 SBA0 V10 SBA2
SBA1 W10 SWE
SBA2 Y11 SA15
SODT0 T12 SODT0
SODT1 U12 SODT1
VDD18-DRAM SCKP T10 SCKP
SCKN U10 SCKN
N8 VCC-DRAM SCKE0 W9 SCKE0
N9 VCC-DRAM SCKE1 Y9 SCKE1
N10 VCC-DRAM SRST Y17 SRST
P8 VCC-DRAM
P9 VCC-DRAM SZQ U17
P10 VCC-DRAM SVREF U16 SVREF
AW-D1
20mA
LDOA-OUT
P14
C51
0.1uF
GND
VDD-DRAM
C52
0.1uF
C50
2.2uF
GND
R59
240-1%
GND
U2
SA0 N3 A0 DQL0 E3 SDQ5
SA1 P7 A1 DQL1 F7 SDQ7
SA2 P3 A2 DQL2 F2 SDQ4
SA3 N2 A3 DQL3 F8 SDQ6
SA4 P8 A4 DQL4 H3 SDQ3
SA5 P2 A5 DQL5 H8 SDQ0
SA6 R8 A6 DQL6 G2 SDQ2
SA7 R2 A7 DQL7 H7 SDQ1
SA8 T8 A8 DQU0 D7 SDQ9
SA9 R3 A9 DQU1 C3 SDQ8
SA10 L7 A10 DQU2 C8 SDQ10
SA11 R7 A11 DQU3 C2 SDQ11
SA12 N7 A12 DQU4 A7 SDQ12
SA13 T3 A13 DQU5 A2 SDQ13
SA14 T7 A14 DQU6 B8 SDQ14
SA15 M7 A15 DQU7 A3 SDQ15
SBA0 M2 BA0 CK J7 SCKP
SBA1 N8 BA1 CK# K7 SCKN
SBA2 M3 BA2 DQSL F3 SDQS0P
DQSL# G3 SDQS0N
SWE L3 WE DQSU C7 SDQS1P
SRAS J3 RAS# DQSU# B7 SDQS1N
SCAS K3 CAS# DML E7 SDQM0
SCS0 L2 CS# DMU D3 SDQM1
SCKE0 K9 CKE
ODT1 J1 SODT1
SVREF M8 VREFCA CS1# L1 SCS1
H1 VREFDQ CKE1 J9 SCKE1
SODT0 K1 ODT ZQ1 L9
A1 VDDQ#1 RESET T2 SRST
C1 VDDQ#2 ZQ L8
F1 VDDQ#3
D2 VDDQ#4
H2 VDDQ#5 VSSQ#1 B1
A8 VDDQ#6 VSSQ#2 D1
H9 VDDQ#7 VSSQ#3 G1
E9 VDDQ#8 VSSQ#4 E2
C9 VDDQ#9 VSSQ#5 D8
N1 VDD#1 VSSQ#6 E8
R1 VDD#2 VSSQ#7 B9
B2 VDD#3 VSSQ#8 F9
K2 VDD#4 VSSQ#9 G9
G7 VDD#5 VSS#1 E1
K8 VDD#6 VSS#2 M1
D9 VDD#7 VSS#3 P1
N9 VDD#8 VSS#4 T1
R9 VDD#9 VSS#5 J2
VSS#6 B3
VSS#7 G8
VSS#8 J8
VSS#9 A9
VSS#10 M9
VSS#11 P9
VSS#12 T9
DDR3
C19
NC/2.2pF
R56
100
VDD-DRAM
R57
240-1%
R58
240-1%
GND
GND
GND
U1G
A1 GND0 GND45 K12
A2 GND1 GND46 K13
F3 GND2 GND47 K14
H12 GND3 GND48 L8
K6 GND4 GND49 L9
L10 GND5 GND50 L11
M11 GND6 GND51 L12
P11 GND7 GND52 L13
V6 GND8 GND53 L14
Y20 GND9 GND54 L18
A15 GND10 GND55 M3
A19 GND11 GND56 M5
A20 GND12 GND57 M8
B1 GND13 GND58 M9
B10 GND14 GND59 M10
B20 GND15 GND60 M12
C4 GND16 GND61 M13
C8 GND17 GND62 M14
C10 GND18 GND63 N11
E5 GND19 GND64 N12
F9 GND20 GND65 N13
F12 GND21 GND66 N14
F18 GND22 GND67 N15
G10 GND23 GND68 N18
G11 GND24 GND69 P7
G12 GND25 GND70 P12
H1 GND26 GND71 P13
H2 GND27 GND72 R10
H10 GND28 GND73 R18
H11 GND29 GND74 T5
H18 GND30 GND75 T7
J3 GND31 GND76 T13
J6 GND32 GND77 V2
J7 GND33 GND78 V3
J8 GND34 GND79 V4
J9 GND35 GND80 V9
J10 GND36 GND81 V12
J11 GND37 GND82 V15
J12 GND38 GND83 V17
K3 GND39 GND84 W1
K7 GND40 GND85 W17
K8 GND41 GND86 W20
K9 GND42 GND87 Y1
K10 GND43 GND88 Y2
K11 GND44 GND89 Y19
AW-D1
GND
GND
DRAM-FB
R11 0R
VDD-DRAM
C14 C11 C12 C16 C17 C18 C53 C54 C10 C13
0.1uF 0.1uF 0.1uF 0.1uF 0.1uF 0.1uF 2.2uF 2.2uF 2.2uF 2.2uF
GND
VDD-DRAM
R12
2K-1%
SVREF
R47
2K-1%
C55 C56 C57
0.1uF 0.1uF 0.1uF
GND

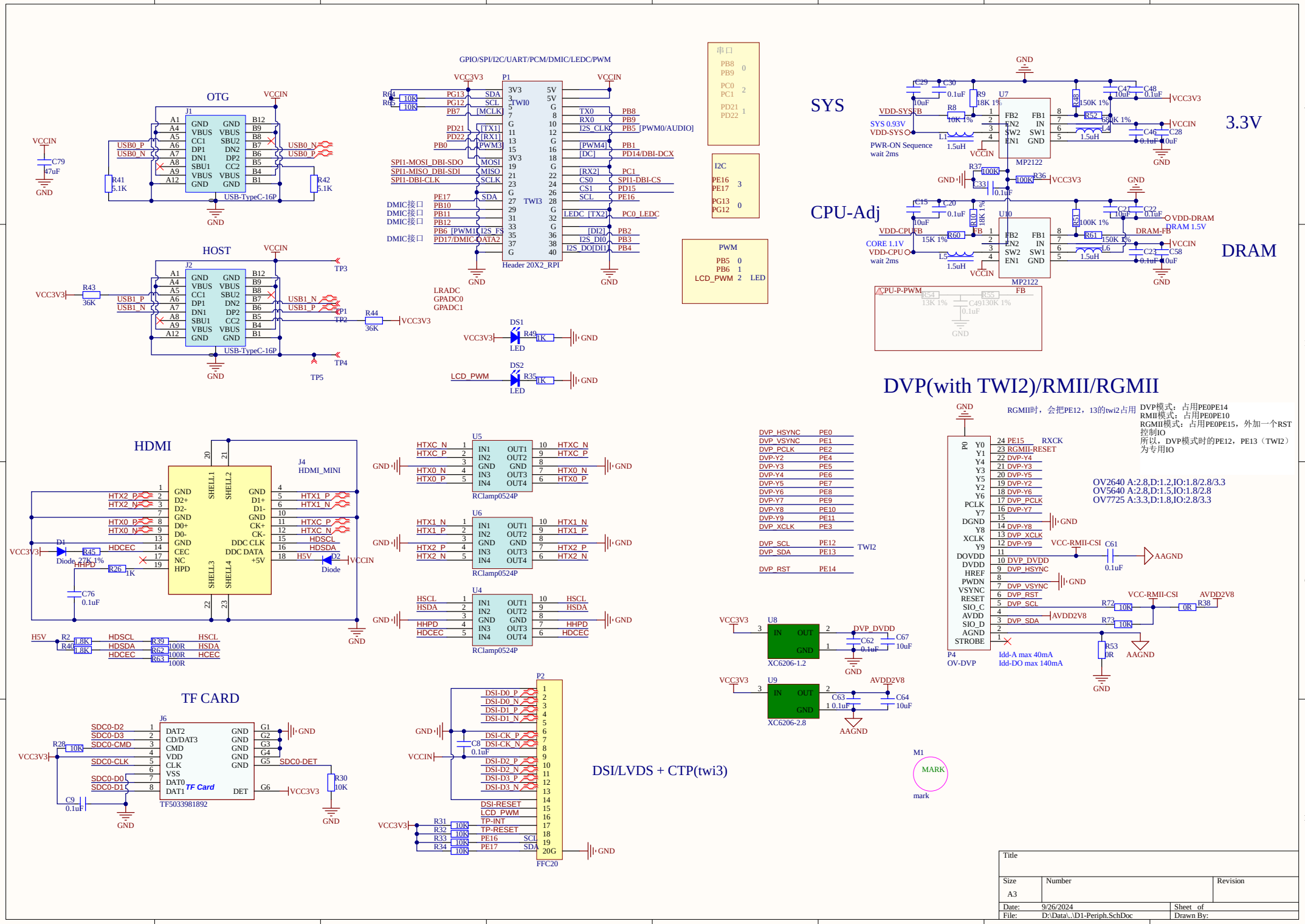

OTG
HOST
HDMI
TF CARD
GPIO/SPI/I2C/UART/PCM/DMIC/LEDC/PWM
SYS
CPU-Adj
3.3V
DRAM
DVP(with TWI2)/RMII/RGMII
DSI/LVDS + CTP(twi3)
RGMII时，会把PE12，13的twi2占用
DVP模式：占用PE0PE14
RMII模式：占用PE0PE10
RGMII模式：占用PE0PE15，外加一个RST控制IO
所以，DVP模式时的PE12，PE13（TWI2）为专用IO
OV2640 A:2.8,D:1.2,IO:1.8/2.8/3.3
OV5640 A:2.8,D:1.5,IO:1.8/2.8
OV7725 A:3.3,D:1.8,IO:2.8/3.3
Title
Size
A3
Number
Revision
Date: 9/26/2024
Sheet of
File: D:\Data\..\D1-Periph.SchDoc
Drawn By:

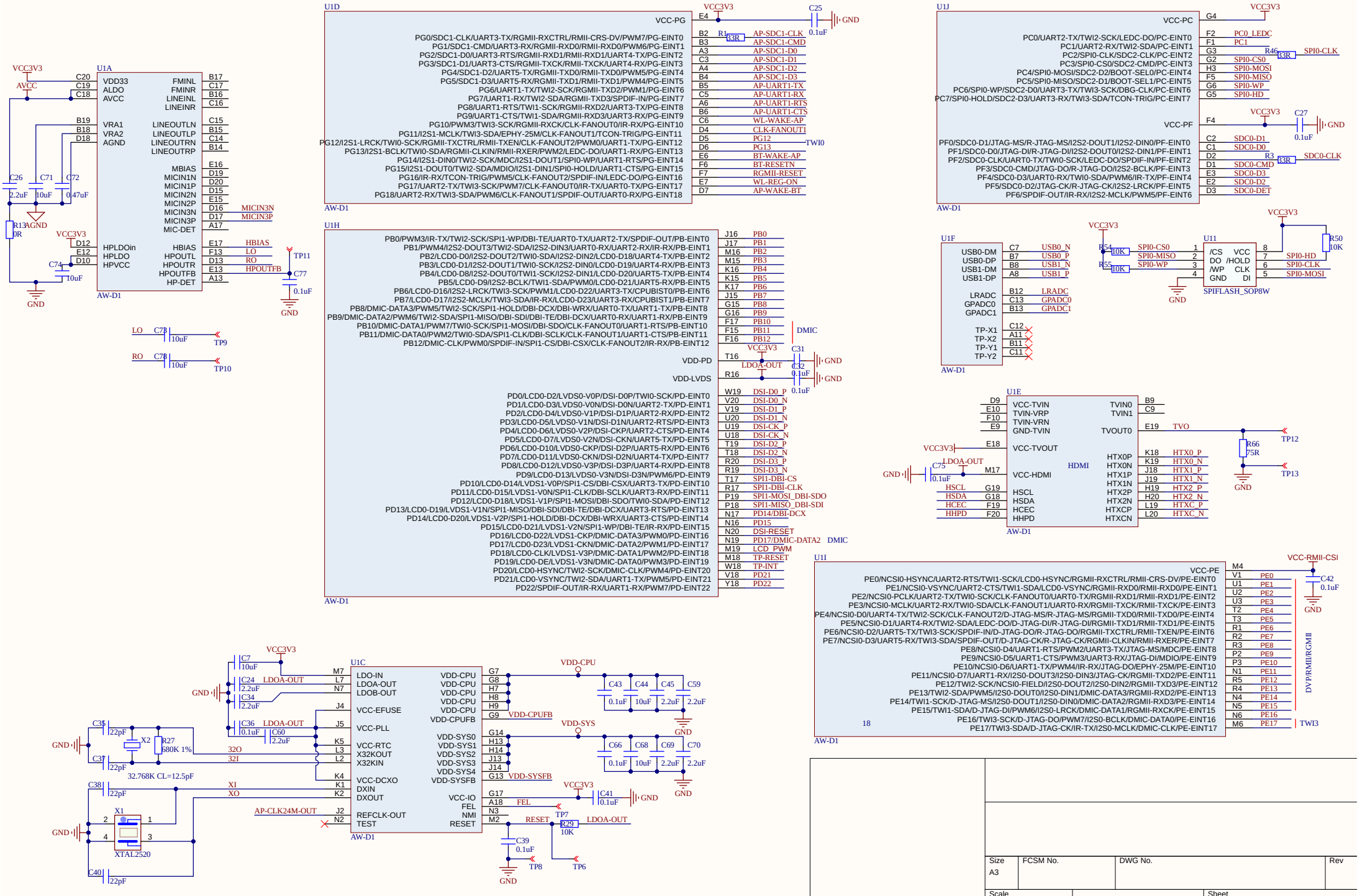

Size A3	FCSM No.	DWG No.	Rev
Scale		Sheet	

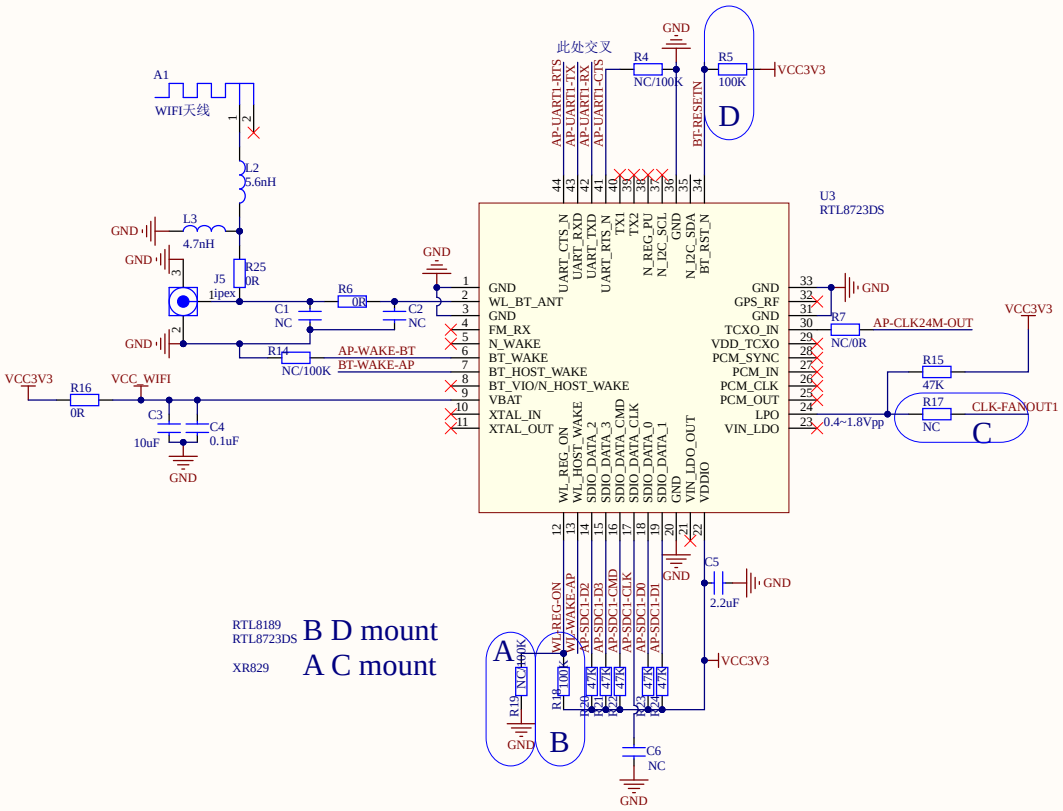

Title		
Size A3	Number	Revision
Date: 9/26/2024		Sheet of
File: D:\Data\..\D1-WIFI-BT.SchDoc		Drawn By: