Admin

Lab0 ✅
Assign0
OH added to calendar
Ed forum
Discord?

Today: Let there be light!

More on RISC-V assembly, instruction encoding

Peripheral access through memory-mapped registers

Goal: blink an LED

Load and store operations

```
lw a2,0x40(a0)
```

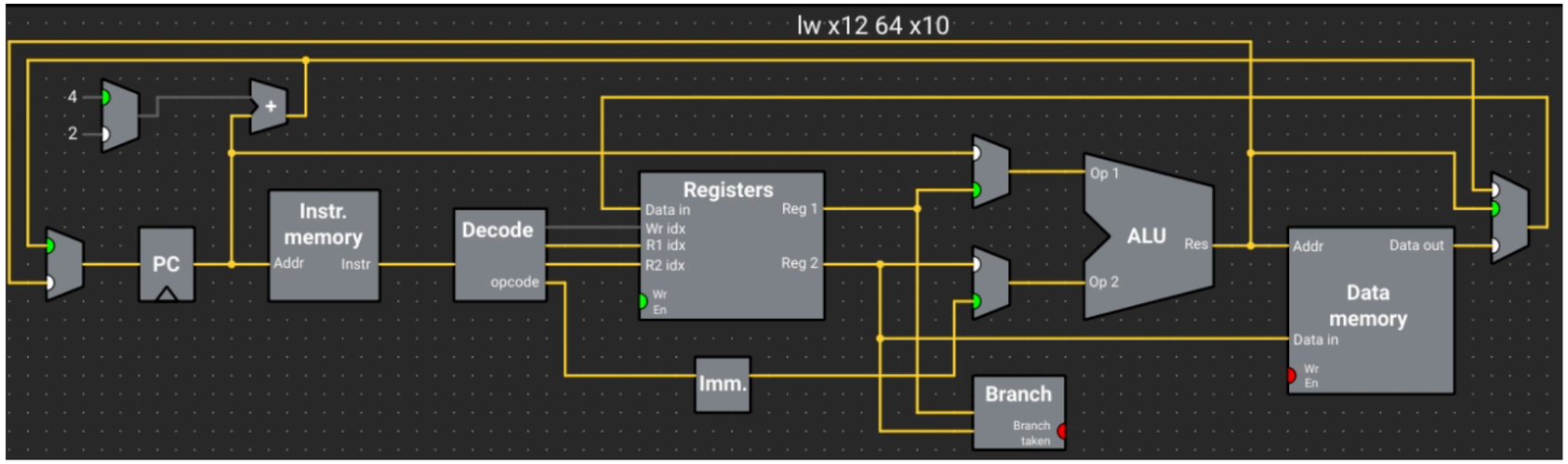

Offset expressed as immediate,
add to base to compute memory address

```
sw a1,0x30(a0)
```

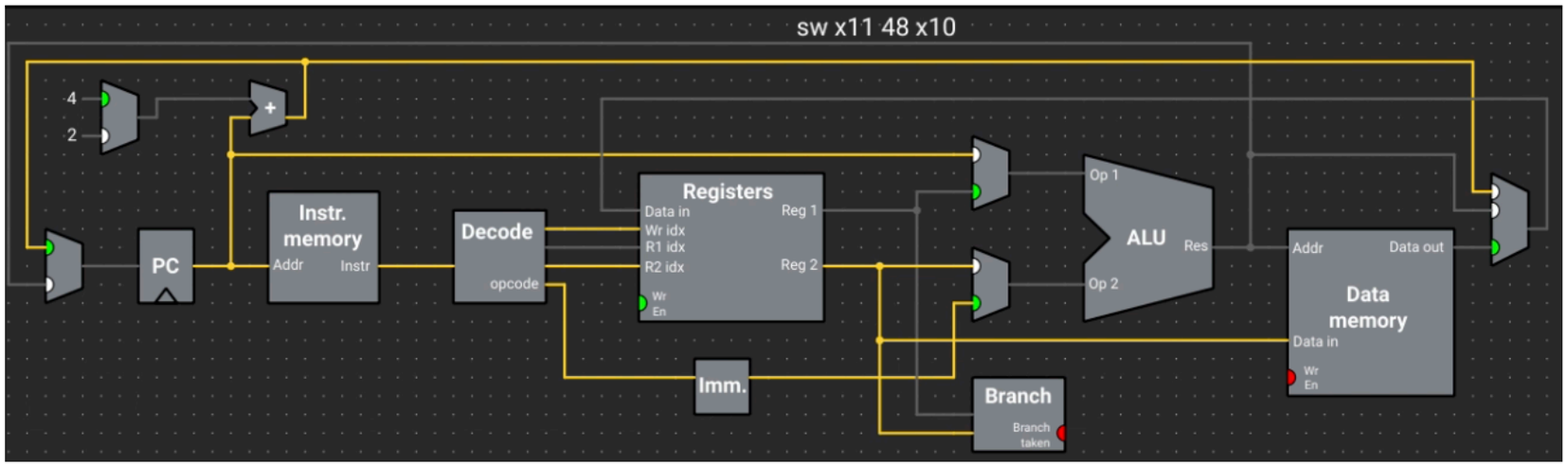

Understanding an ISA

We want to learn how processors represent and execute instructions.

One means of learning an ISA is to follow the data paths in the "floor plan"

Another is to look at how the bits are used in the instruction encoding. RISC-V uses 32-bit instructions. Packing all functionality into a 32-bits encoding necessitates trade-offs and careful design.

RISC-V Instruction Encoding

31 27 26 25	24 20	19 15	14 12	11 7	6 0	
funct7	rs2	rs1	funct3	rd	opcode	R-type
imm[11:0]		rs1	funct3	rd	opcode	I-type
imm[11:5]	rs2	rs1	funct3	imm[4:0]	opcode	S-type
imm[12|10:5]	rs2	rs1	funct3	imm[4:1|11]	opcode	B-type
imm[31:12]				rd	opcode	U-type

add x3 , x1 , x2

0000000	rs2	rs1	000	rd	0110011	ADD
0100000	rs2	rs1	000	rd	0110011	SUB
0000000	rs2	rs1	001	rd	0110011	SLL
0000000	rs2	rs1	010	rd	0110011	SLT
0000000	rs2	rs1	011	rd	0110011	SLTU
0000000	rs2	rs1	100	rd	0110011	XOR
0000000	rs2	rs1	101	rd	0110011	SRL
0100000	rs2	rs1	101	rd	0110011	SRA
0000000	rs2	rs1	110	rd	0110011	OR
0000000	rs2	rs1	111	rd	0110011	AND

0000	0000	0010	00001	000	00011	0110	011
0	0	2	0	8	1	B	3

Immediate encoding

31 27 26 25	24 20	19 15	14 12	11 7	6 0	
funct7	rs2	rs1	funct3	rd	opcode	R-type
imm[11:0]		rs1	funct3	rd	opcode	I-type

imm[11:0]	rs1	000	rd	0010011	ADDI
imm[11:0]	rs1	010	rd	0010011	SLTI
imm[11:0]	rs1	011	rd	0010011	SLTIU
imm[11:0]	rs1	100	rd	0010011	XORI
imm[11:0]	rs1	110	rd	0010011	ORI
imm[11:0]	rs1	111	rd	0010011	ANDI

Your turn! `addi a0,zero,21`

```
00000001010100000000010100010011
0     1     5     0     0     5     1     3
```

Know your tools: assembler

The *assembler* reads assembly instructions (text) and outputs as machine-code (binary). The reverse process is called *disassembly*

These translations are fairly mechanical

```
$ riscv64-unknown-elf-as add.s -o add.o

$ ls -l add.o
928 add.o

$ riscv64-unknown-elf-objcopy add.o add.bin -O binary

$ ls -l add.bin
4 add.bin

$ hexdump -C add.bin
00000000  b3 81 20 00
```

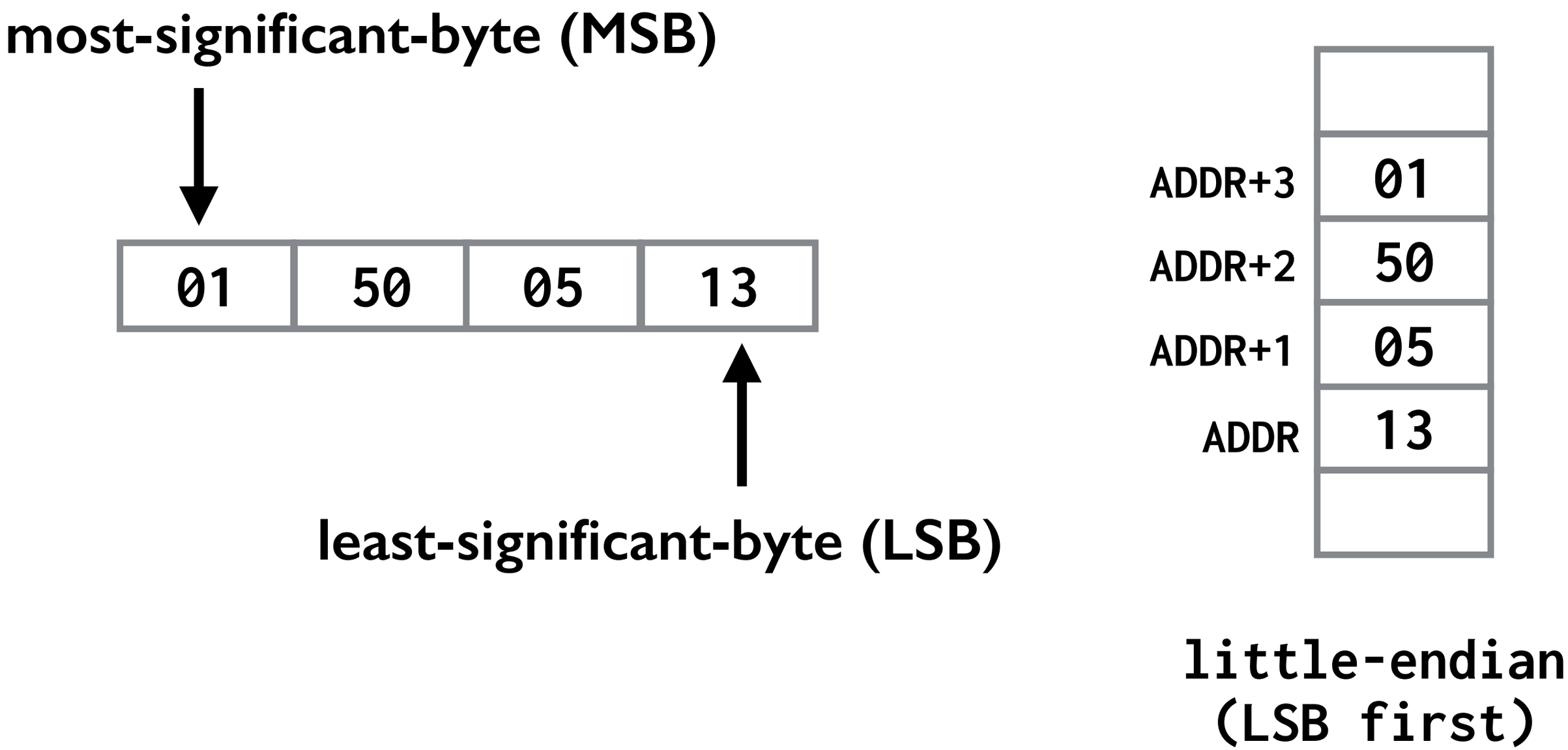

RISC-V uses little-endian

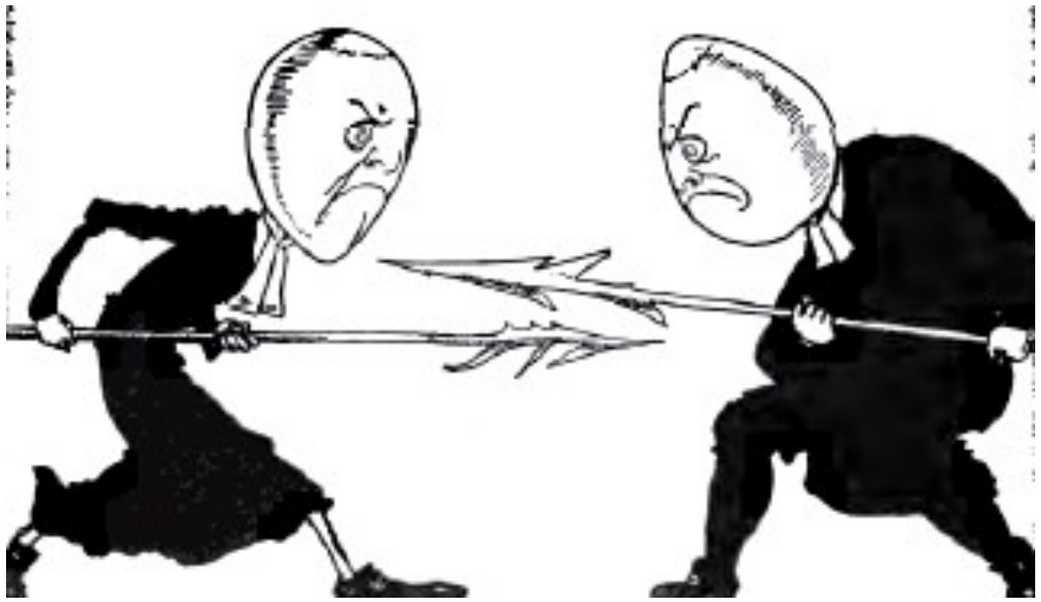

The 'little-endian' and 'big-endian' terminology which is used to denote the two approaches [to addressing memory] is derived from Swift's Gulliver s Travels. The inhabitants of Lilliput, who are well known for being rather small, are, in addition, constrained by law to break their eggs only at the little end. When this law is imposed, those of their fellow citizens who prefer to break their eggs at the big end take exception to the new rule and civil war breaks out. The big-endians eventually take refuge on a nearby island, which is the kingdom of Blefuscu. The civil war results in many casualties.

Read: Holy Wars and a Plea For Peace, D. Cohen

Let there be light

Computers have *peripherals* that interface to the world

GPIO pins are peripherals

Let's learn how to control a GPIO pin with code!

Mango Pi GPIO

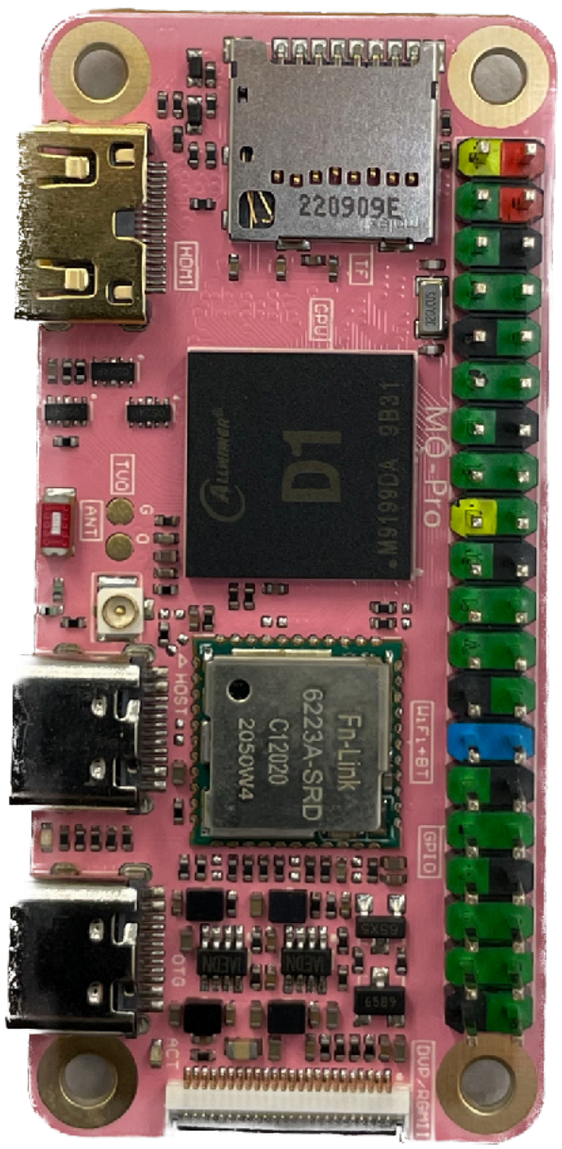

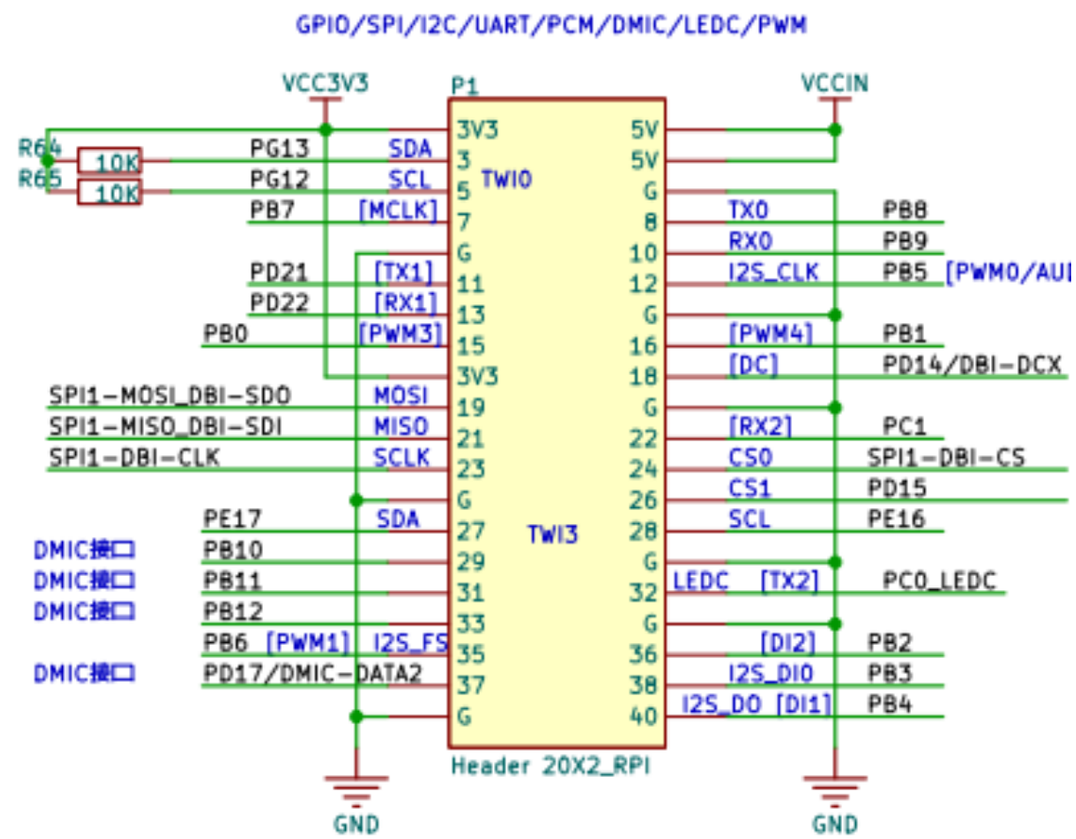

9.7 GPIO

9.7.1 Overview

The general purpose input/output (GPIO) is one of the blocks controlling the chip multiplexing pins. The D1-H supports 6 groups of GPIO pins. Each pin can be configured as input or output and these pins are used to generate input signals or output signals for special purposes.

The Port Controller has the following features:

- 6 groups of ports (PB, PC, PD, PE, PF, PG)
- Software control for each signal pin
- Data input (capture)/output (drive)
- Each GPIO peripheral can produce an interrupt

D1-H User Manual p.1083

Connect LED to GPIO PB0

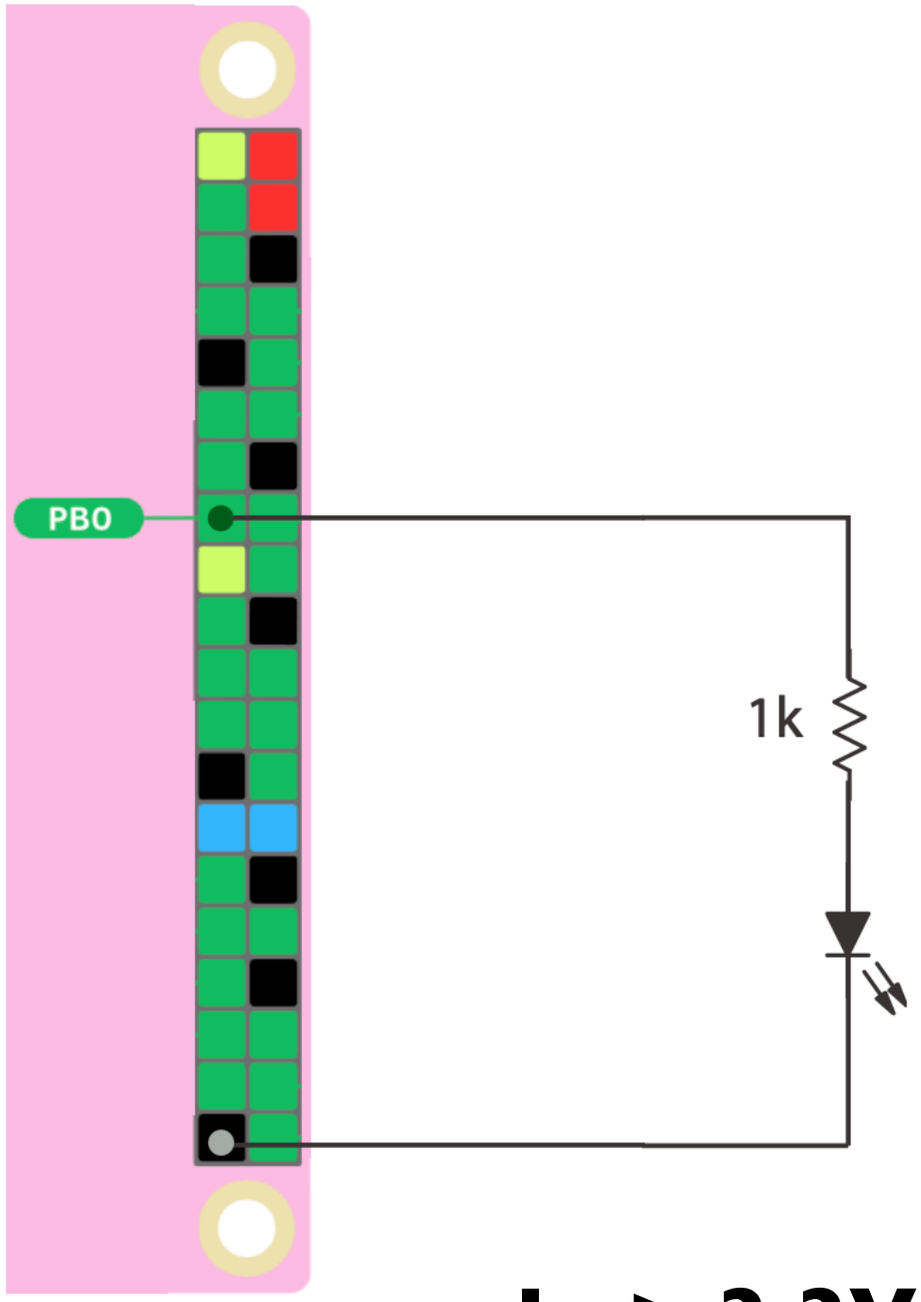

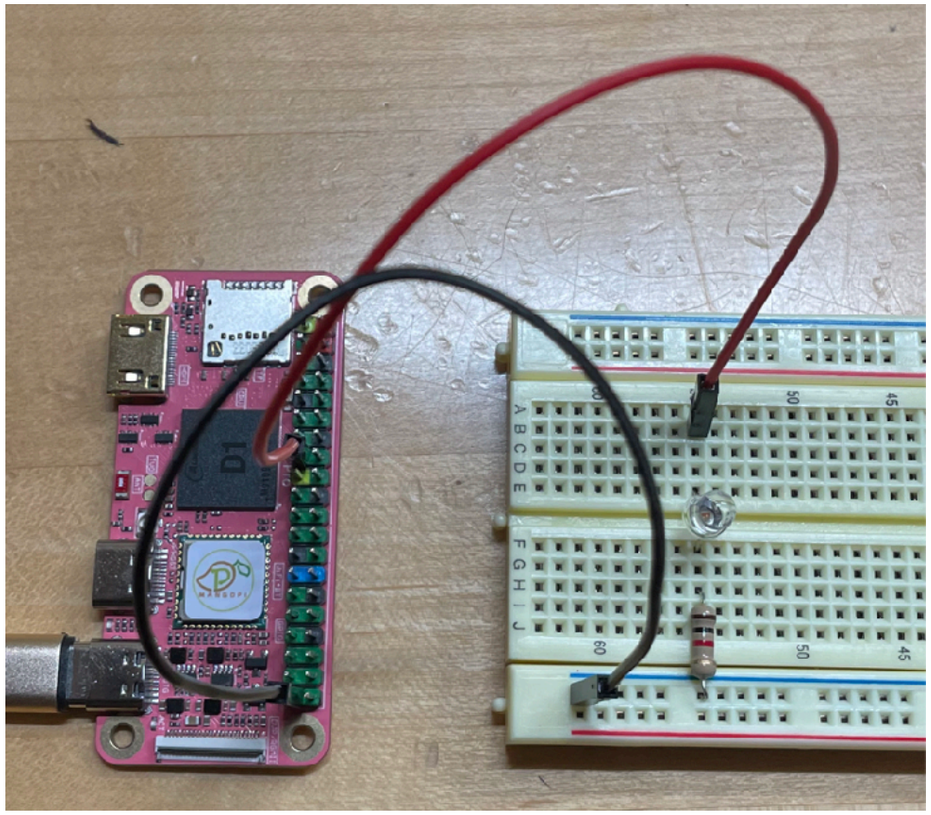

1 -> 3.3V
0 -> 0.0V (GND)

Memory Map

Peripheral registers are mapped into address space

Read/write to these addresses controls peripheral

Memory-Mapped IO (MMIO)

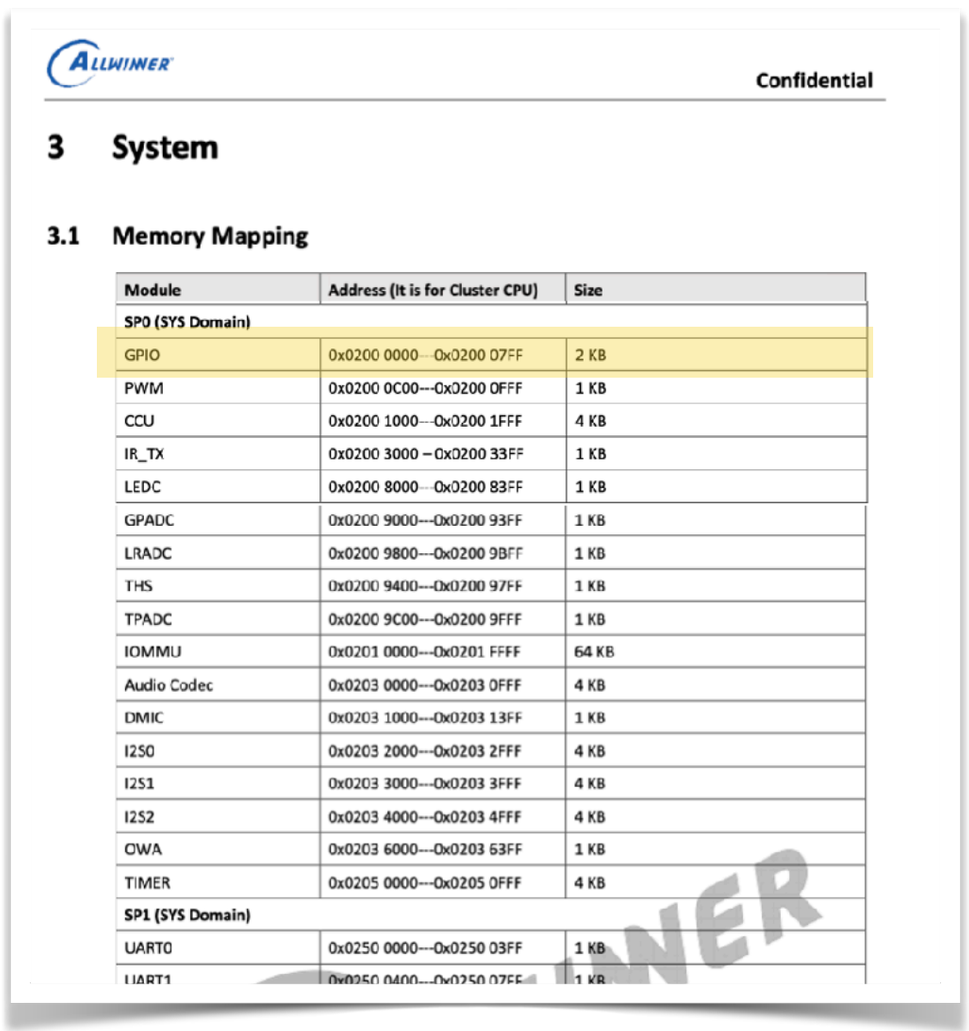

ALLWINNER Confidential

3 System

3.1 Memory Mapping

Module	Address (It is for Cluster CPU)	Size
SP0 (SYS Domain)		
GPIO	0x0200 0000---0x0200 07FF	2 KB
PWM	0x0200 0C00---0x0200 0FFF	1 KB
CCU	0x0200 1000---0x0200 1FFF	4 KB
IR_TX	0x0200 3000 – 0x0200 33FF	1 KB
LEDC	0x0200 8000---0x0200 83FF	1 KB
GPADC	0x0200 9000---0x0200 93FF	1 KB
LRADC	0x0200 9800---0x0200 9BFF	1 KB
THS	0x0200 9400---0x0200 97FF	1 KB
TPADC	0x0200 9C00---0x0200 9FFF	1 KB
IOMMU	0x0201 0000---0x0201 FFFF	64 KB
Audio Codec	0x0203 0000---0x0203 0FFF	4 KB
DMIC	0x0203 1000---0x0203 13FF	1 KB
I2S0	0x0203 2000---0x0203 2FFF	4 KB
I2S1	0x0203 3000---0x0203 3FFF	4 KB
I2S2	0x0203 4000---0x0203 4FFF	4 KB
OWA	0x0203 6000---0x0203 63FF	1 KB
TIMER	0x0205 0000---0x0205 0FFF	4 KB
SP1 (SYS Domain)		
UART0	0x0250 0000---0x0250 03FF	1 KB
UART1	0x0250 0400---0x0250 07FF	1 KB

Ref: D1-H User Manual p.45

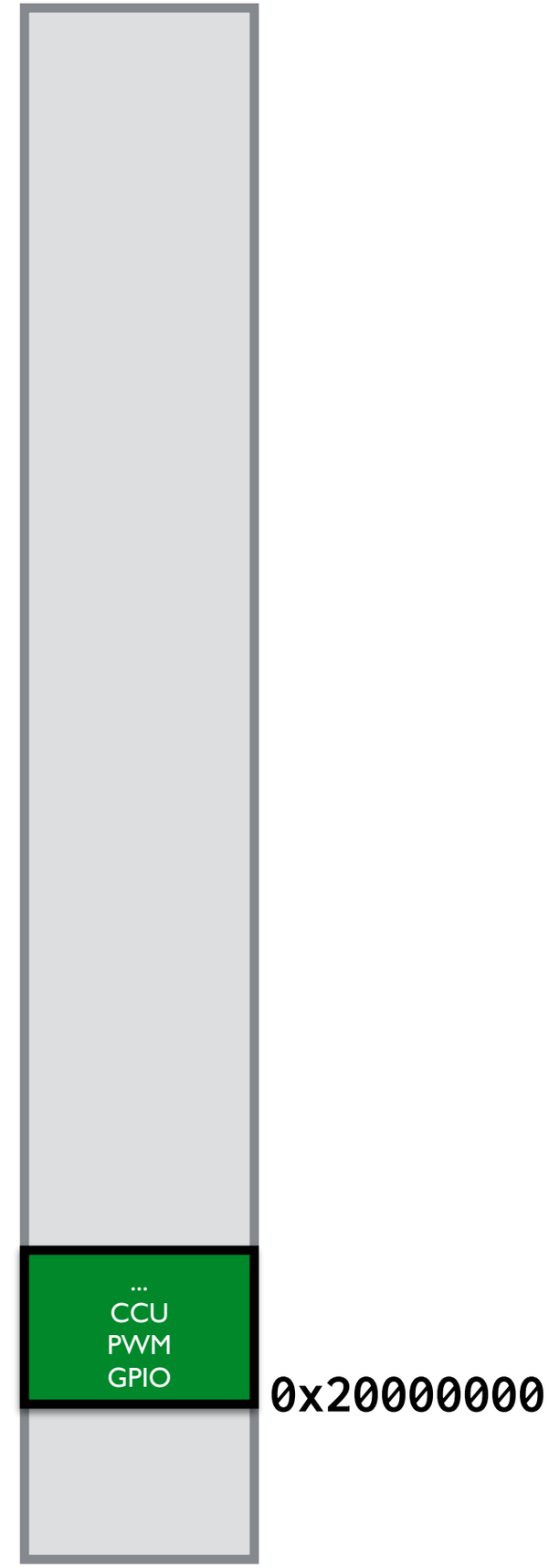

9.7.4 Register List

Module Name	Base Address
GPIO	0x02000000

Register Name	Offset	Description
PB_CFG0	0x0030	PB Configure Register 0
PB_CFG1	0x0034	PB Configure Register 1
PB_DAT	0x0040	PB Data Register
PB_DRV0	0x0044	PB Multi_Driving Register 0
PB_DRV1	0x0048	PB Multi_Driving Register 1
PB_PULL0	0x0054	PB Pull Register 0
PC_CFG0	0x0060	PC Configure Register 0
PC_DAT	0x0070	PC Data Register
PC_DRV0	0x0074	PC Multi_Driving Register 0
PC_PULL0	0x0084	PC Pull Register 0

Configure register used to set pin function

Data register used to read/ write pin value

9.7.3.2 GPIO Multiplex Function

Table 9-21 to Table 9-26 show the multiplex function pins of the D1-H.

NOTE

For each GPIO, Function0 is input function; Function1 is output function; Function9 to Function13 are reserved.

Table 9-21 PB Multiplex Function

GPIO Port	Function 2	Function 3	Function 4	Function 5	Function 6	Function 7	Function 8	Function 14
PB0	PWM3	IR-TX	TWI2-SCK	SPI1-WP/DBI-TE	UART0-TX	UART2-TX	OWA-OUT	PB-EINT0
PB1	PWM4	I2S2-DOUT3	TWI2-SDA	I2S2-DIN3	UART0-RX	UART2-RX	IR-RX	PB-EINT1
PB2	LCD0-D0	I2S2-DOUT2	TWI0-SDA	I2S2-DIN2	LCD0-D18	UART4-TX		PB-EINT2
PB3	LCD0-D1	I2S2-DOUT1	TWI0-SCK	I2S2-DIN0	LCD0-D19	UART4-RX		PB-EINT3
PB4	LCD0-D8	I2S2-DOUT0	TWI1-SCK	I2S2-DIN1	LCD0-D20	UART5-TX		PB-EINT4

Ref: D1-H User Manual p.1093

GPIO Configure Register

PB Config0 @0x2000030

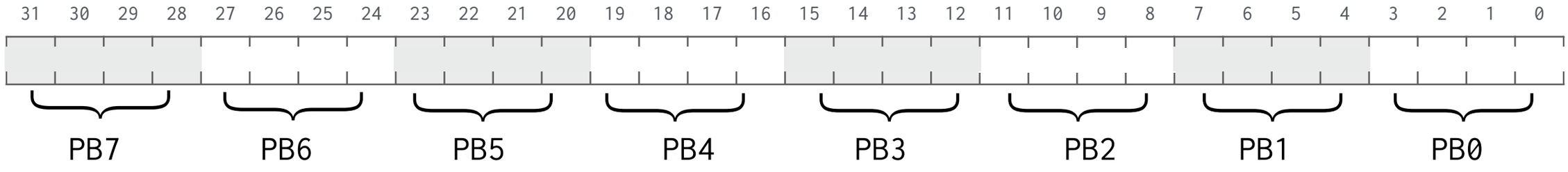

4 bits per GPIO pin

8 pins configured in each 32-bit register

Select pin function from 16 options:

Input (0), Output (1), Alt2-Alt8, 9-13 reserved, Interrupt (14), Disabled (15)

Offset: 0x0030			Register Name: PB_CFG0
Bit	**Read/Write**	**Default/Hex**	**Description**
3:0	R/W	0xF	PB0_SELECT PB0 Select 0000:Input 0001:Output 0010:PWM3 0011:IR-TX 0100:TWI2-SCK 0101:SPI1-WP/DBI-TE 0110:UART0-TX 0111:UART2-TX 1000:OWA-OUT 1001:Reserved 1110:PB-EINT0 1111:IO Disable

Ref: D1-H User Manual p.1097

GPIO Data Register

PB Data @0x2000040

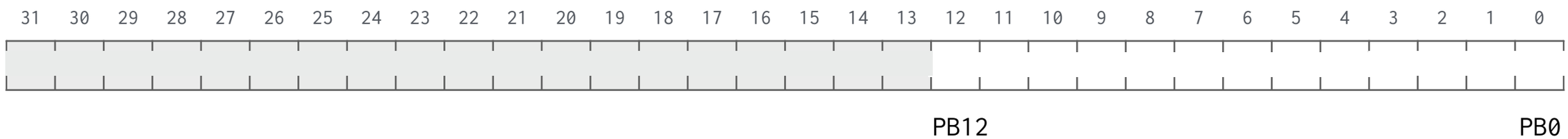

1 bit per GPIO pin

Value is 1 if high, 0 low

9.7.5.3 0x0040 PB Data Register (Default Value: 0x0000_0000)

Offset: 0x0040			Register Name: PB_DAT
Bit	**Read/Write**	**Default/Hex**	**Description**
31:13	/	/	/
12:0	R/W	0x0	PB_DAT If the port is configured as the input function, the corresponding bit is the pin state. If the port is configured as the output function, the pin state is the same as the corresponding bit. The read bit value is the value set up by software. If the port is configured as a functional pin, the undefined value will be read.

Ref: D1-H User Manual p.1098

Using xfel

BOOTROM of Mango Pi runs "FEL" by default
(Firmware Exchange Loader)
FEL listens on USB port for commands
Run `xfel` on your laptop to talk to FEL on Pi

Can peek and poke to memory addresses!

```
$ xfel write32 0x02000030 0x1
$ xfel write32 0x02000040 0x1
```

on.s

```
# config PB0 as output, PB CFG0 @ 0x2000030

lui   a0,0x2000        # GPIO base address
addi  a1,zero,1        # 1 for output
sw    a1,0x30(a0)      # store to PB config0

# set PB0 value to 1, PB data @ 0x2000040

sw    a1,0x40(a0)      # turn on PB0

# loop forever
loop:
    j loop
```

Build and execute

```
$ riscv64-unknown-elf-as on -o on.o

$ riscv64-unknown-elf-objcopy on.o on.bin -O binary

$ mango-run on.bin
            xfel ddr d1
            xfel write 0x40000000 on.bin
            xfel exec  0x40000000
```

blink.s

```
    lui     a0,0x2000
    addi    a1,zero,1
    sw      a1,0x30(a0)     # config PB0 as output

loop:
    xori    a1,a1,1         # xor ^ 1 invert bit 0
    sw      a1,0x40(a0)     # flip bit on<->off

    lui     a2,0x3f00       # busy loop wait
delay:
    addi    a2,a2,-1
    bne     a2,zero,delay

    j loop                  # repeat forever
```

Key concepts so far

Bits are bits; bitwise operations

Memory addresses (64-bits) refer to bytes (8-bits), words are 4 bytes

Memory stores both instructions and data

Computers repeatedly fetch, decode, and execute instructions

RISC-V instructions: ALU, load/store, branch

General purpose IO (GPIO), peripheral registers, MMIO

Resources to keep handy

D1-H User Manual

Mango Pi pinout

RISC-V Instruction Set Manual

Ripes simulator