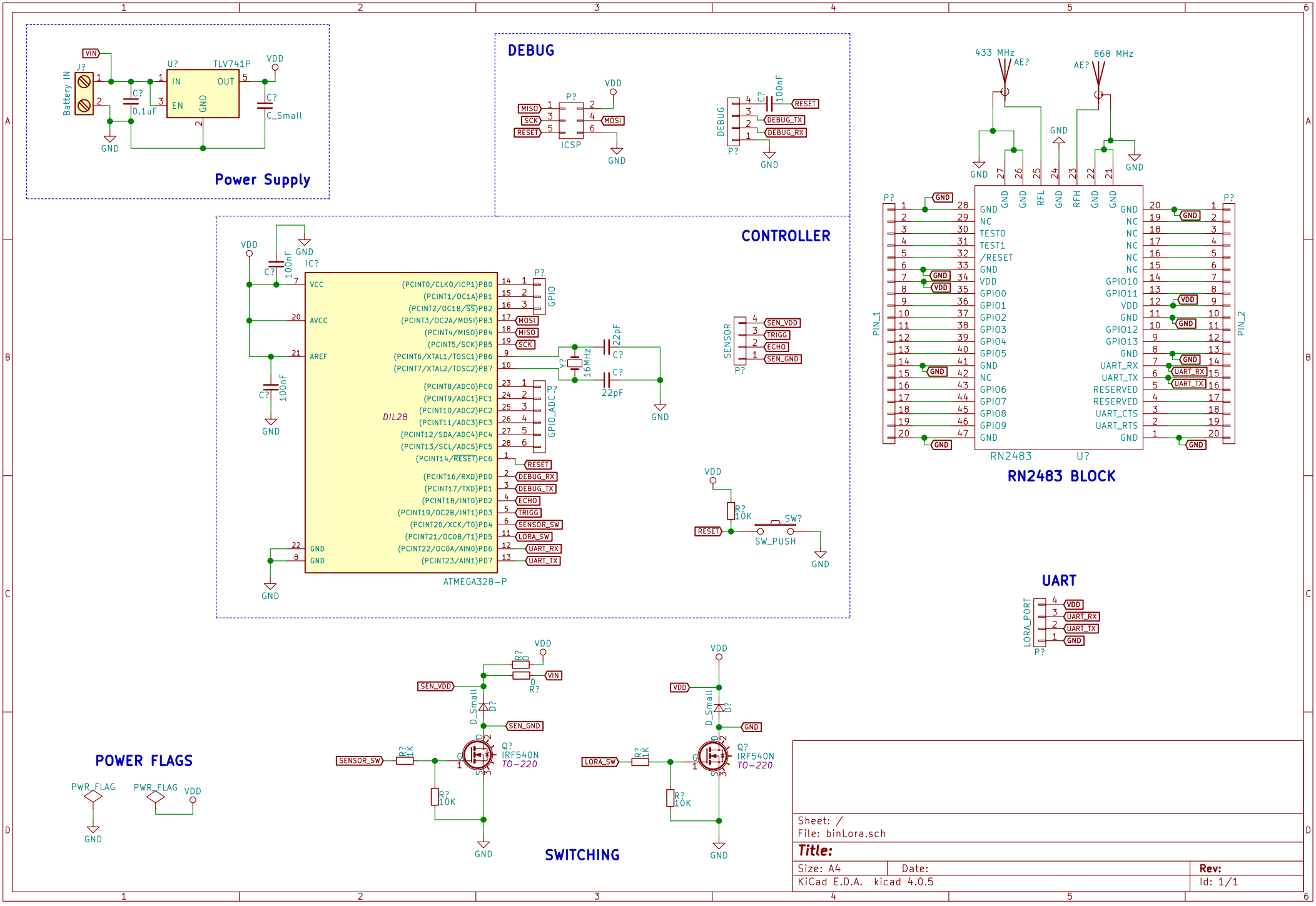
Power Supply
Battery IN
J?
VIN
U?
TLV741P
IN
OUT
EN
GND
C?
0.1uF
C?
C_Small
VDD
GND
DEBUG
P?
MISO
SCK
RESET
MOSI
ICSP
VDD
GND
DEBUG
C?
100nF
RESET
DEBUG_TX
DEBUG_RX
P?
GND
CONTROLLER
VDD
GND
C?
100nF
IC?
VCC
AVCC
AREF
C?
100nF
GND
DIL28
(PCINT0/CLKO/ICP1)PB0
(PCINT1/OC1A)PB1
(PCINT2/OC1B/SS)PB2
(PCINT3/OC2A/MOSI)PB3
(PCINT4/MISO)PB4
(PCINT5/SCK)PB5
(PCINT6/XTAL1/TOSC1)PB6
(PCINT7/XTAL2/TOSC2)PB7
(PCINT8/ADC0)PC0
(PCINT9/ADC1)PC1
(PCINT10/ADC2)PC2
(PCINT11/ADC3)PC3
(PCINT12/SDA/ADC4)PC4
(PCINT13/SCL/ADC5)PC5
(PCINT14/RESET)PC6
(PCINT16/RXD)PD0
(PCINT17/TXD)PD1
(PCINT18/INT0)PD2
(PCINT19/OC2B/INT1)PD3
(PCINT20/XCK/T0)PD4
(PCINT21/OC0B/T1)PD5
(PCINT22/OC0A/AIN0)PD6
(PCINT23/AIN1)PD7
GND
GND
ATMEGA328-P
P?
GPIO
MOSI
MISO
SCK
Y?
16MHz
22pF
C?
22pF
C?
GND
P?
GPIO_ADC
RESET
DEBUG_RX
DEBUG_TX
ECHO
TRIGG
SENSOR_SW
LORA_SW
UART_RX
UART_TX
SENSOR
SEN_VDD
TRIGG
ECHO
SEN_GND
P?
VDD
R?
10K
RESET
SW?
SW_PUSH
GND
433 MHz
AE?
868 MHz
AE?
GND
GND
GND
27
26
25
24
23
22
21
GND
GND
RFL
GND
RFH
GND
GND
P?
PIN_1
GND
GND
VDD
GND
GND
GND