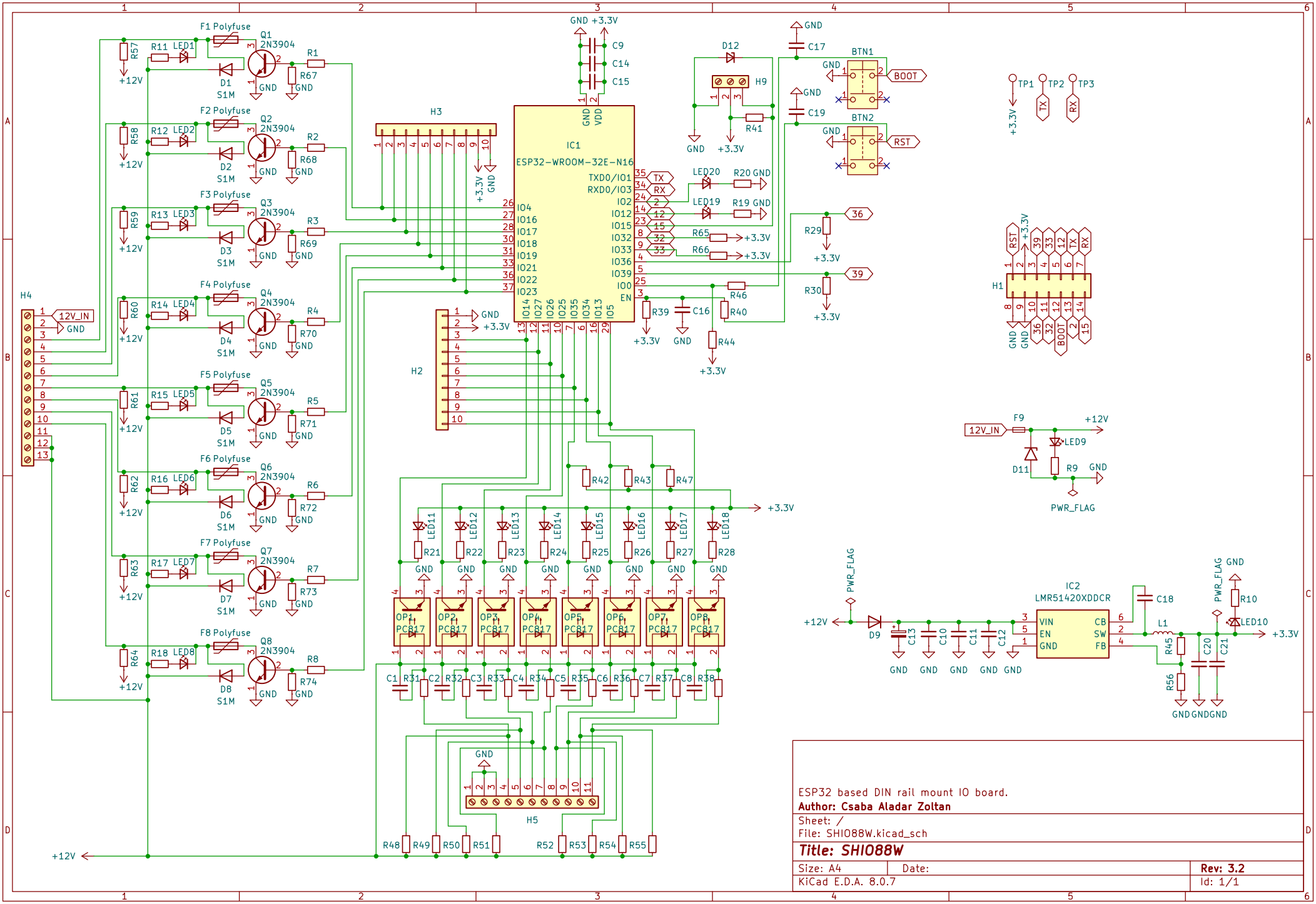

ESP32 based DIN rail mount IO board.

Author: Csaba Aladar Zoltan

Sheet: /

File: SHIO88W.kicad_sch

Title: SHIO88W

Size: A4	Date:	**Rev: 3.2**
KiCad E.D.A. 8.0.7		Id: 1/1