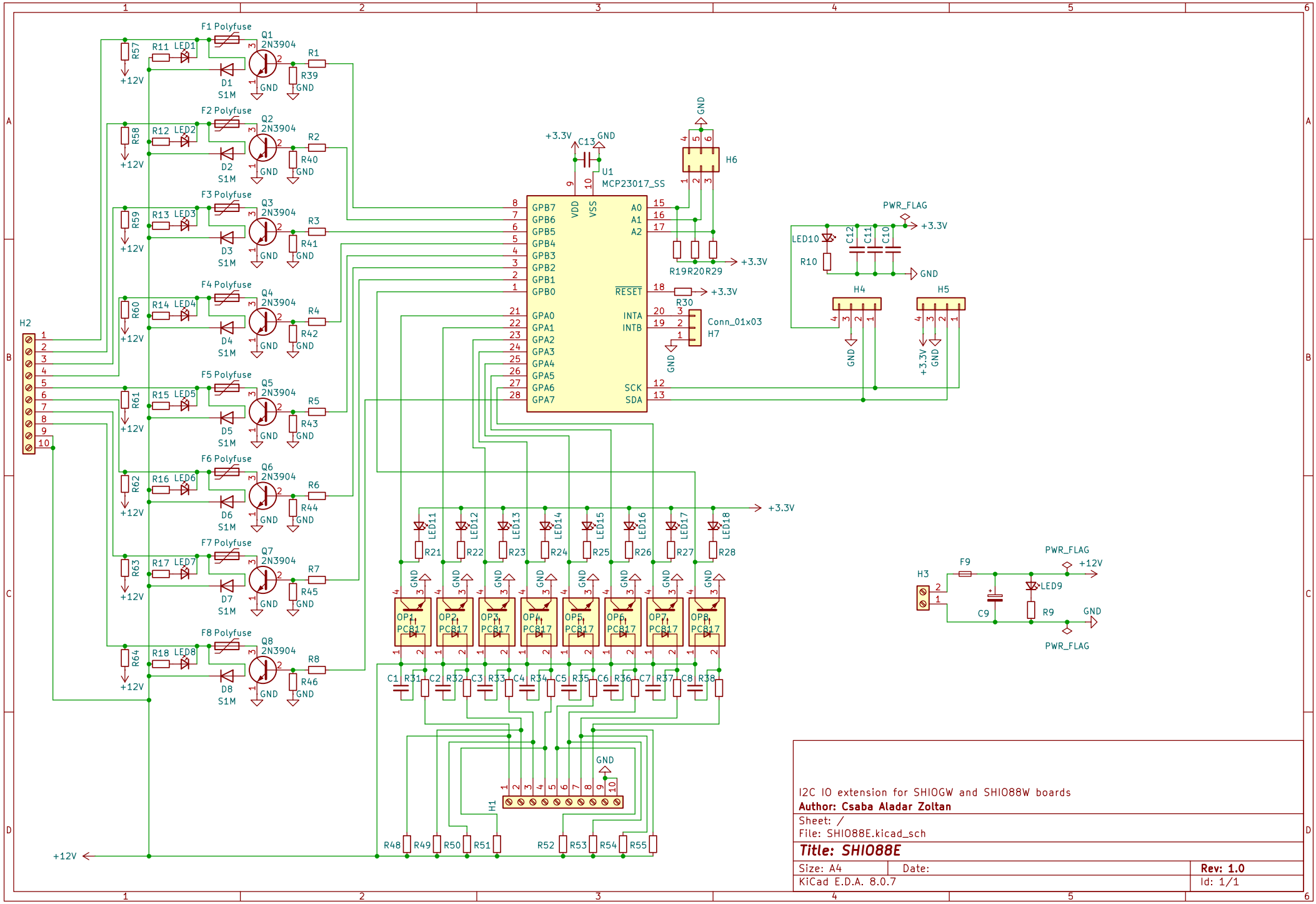

I2C IO extension for SHIOGW and SHIO88W boards

Author: Csaba Aladar Zoltan

Sheet: /

File: SHIO88E.kicad_sch

Title: SHIO88E

Size: A4	Date:	**Rev: 1.0**
KiCad E.D.A. 8.0.7		Id: 1/1