# USAvionix

## Defending what matters

Awareness without gaps

c@usavx.com | www.usavionix.com

# Team

# Why

***Because today's threats move faster than human response.***

From sabotage to natural disasters, the speed, scale, and unpredictability of modern crisis demand a new class of technology, one that doesn't just collect data, but interprets, decides, and acts in near real-time. USAvionix exists to meet that need.

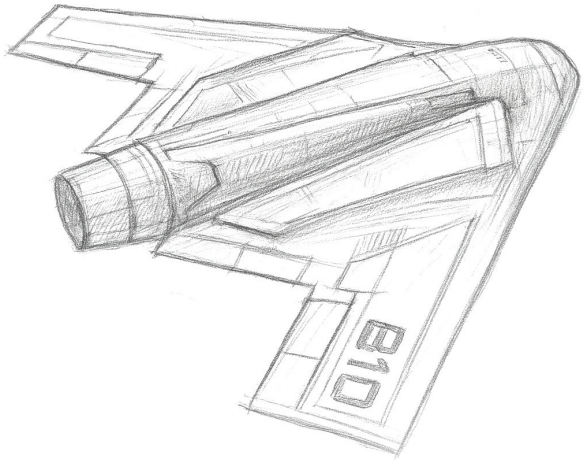

# Vision

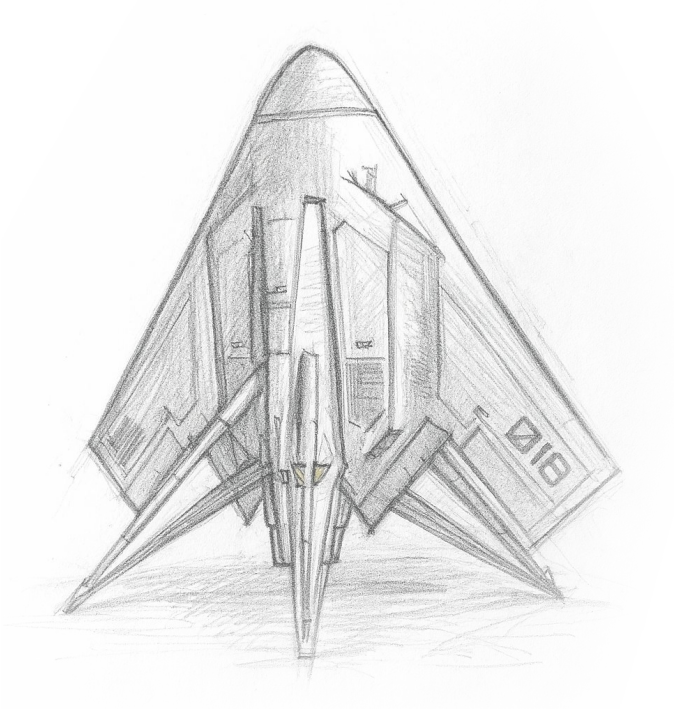

To lead the future of defense and public safety through ***autonomous systems that think, decide, and act faster than any threat***, shaping a world where intelligent aerial technology protects critical infrastructure and responds to danger in real time.

# Phalanx AI Software Platform

***The AI command layer that transforms drone data into real-time mission decisions.***

Phalanx fuses sensor inputs into a unified view, orchestrates autonomous swarms/onboard agents, and delivers the clarity to act under pressure.

Built for speed and integration, Phalanx turns intelligence into decisive action, at the edge, in motion.

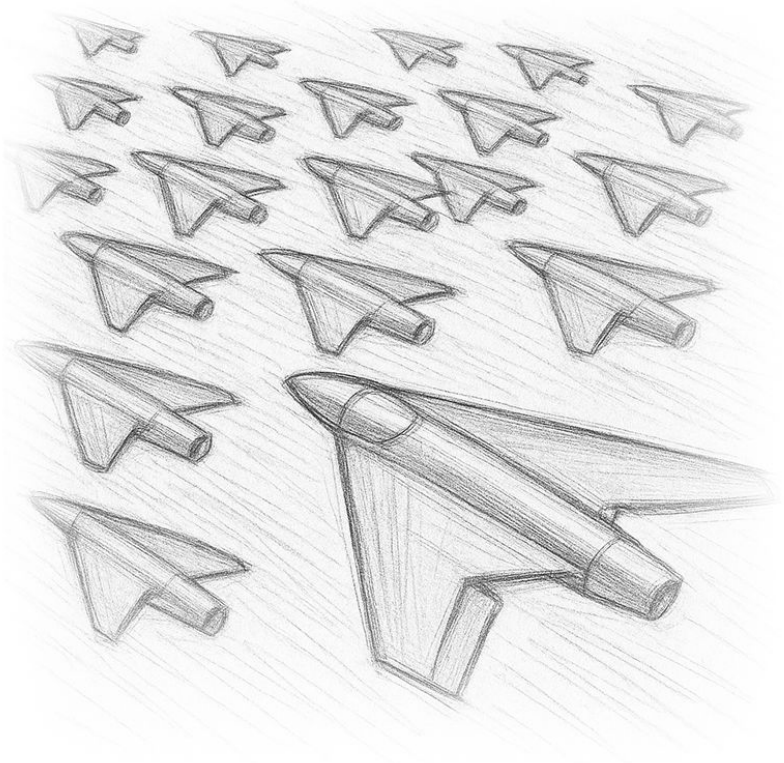

# Delta Hardware Platform

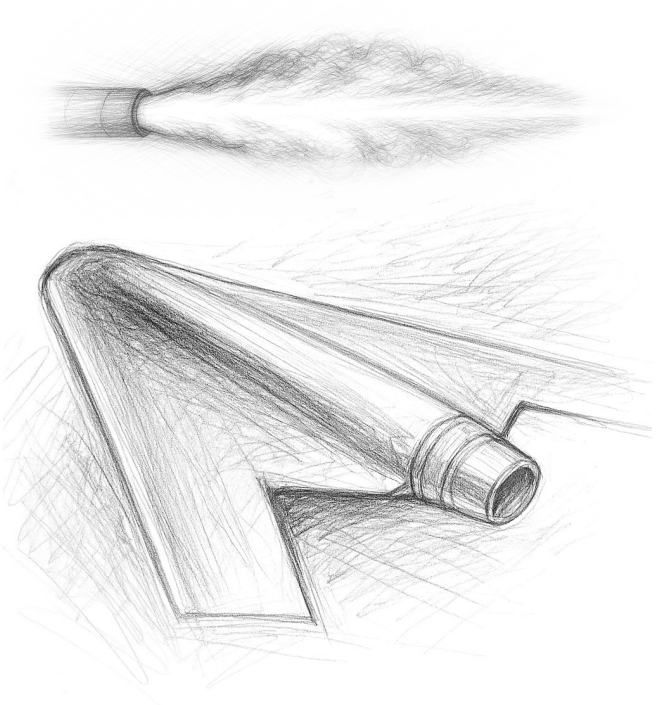

USAvionix's edge-native drone built for real-time autonomy in contested environments. ***Compact, modular, and powered by multi-agent onboard AI***, it identifies threats, tracks targets, and responds without relying on cloud or operator control. Delta is more than a drone, it's a frontline decision-maker, built to act faster than the threat.

# Market Target

### Defense & National Security

Autonomous ISR, threat detection, and rapid response in contested environments

### Critical Infrastructure Protection

Real-time monitoring and autonomous incident response for power plants, pipelines, borders, and transportation

### Emergency Response & Public Safety

Autonomous aerial support for firefighting, disaster zones, and law enforcement, where speed and clarity are life-critical

# Seed

Raising $3M to complete our first prototype, ready to:

Take off, stabilize, fly, land (autonomously...)

Autonomy at scale isn't a feature, it's a strategic necessity

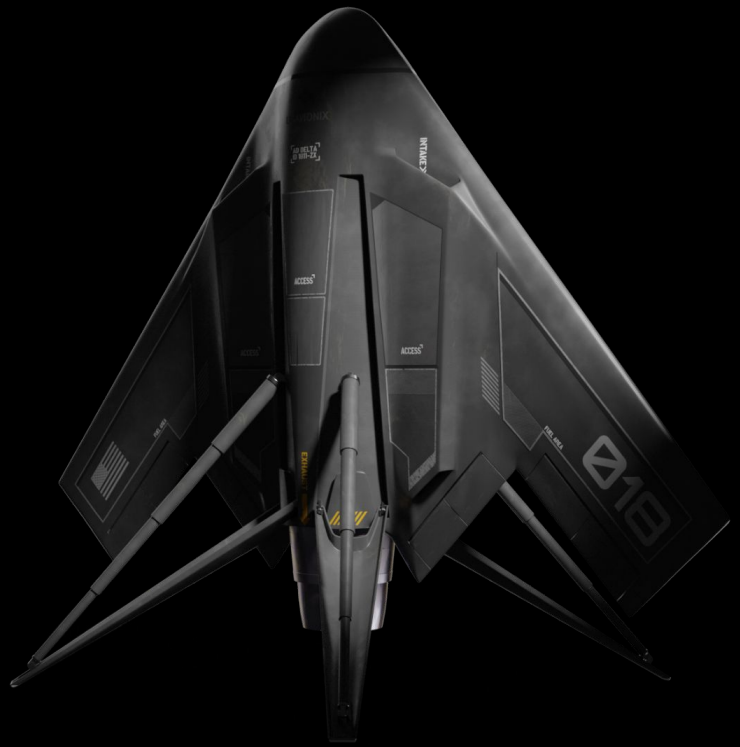


USAvionix

c@usavx.com