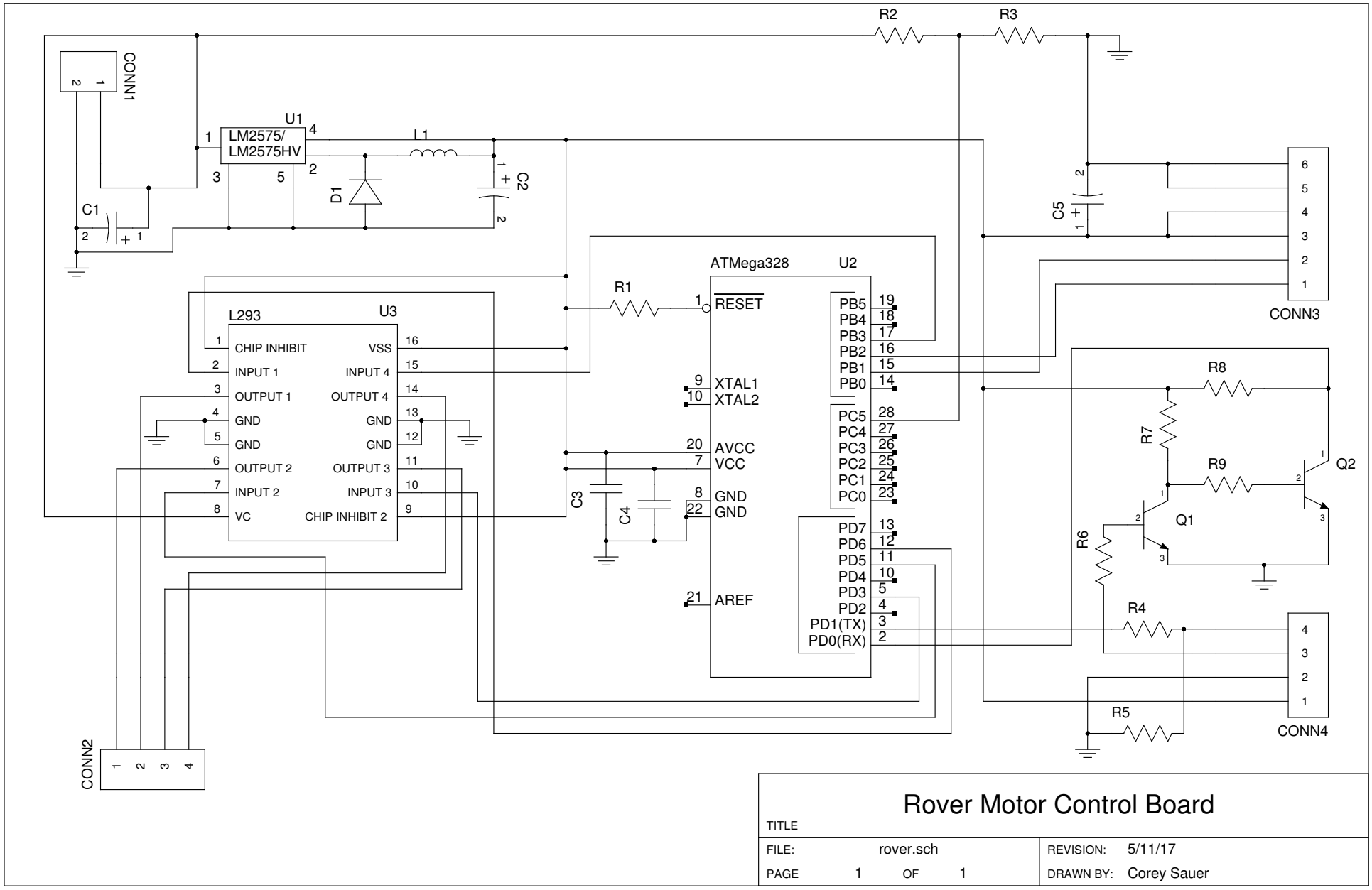

Rover Motor Control Board

TITLE

FILE:	rover.sch	REVISION:	5/11/17
PAGE 1 OF 1		DRAWN BY:	Corey Sauer