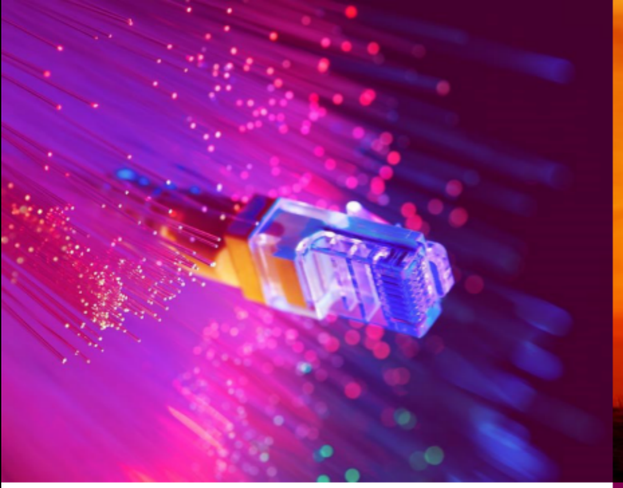

Introduction to GPU parallel computing and programming model

High-Level GPU Programming

2024-02

CSC Training

Introduction to GPU parallel computing and programming model

High Performance Computing through the ages

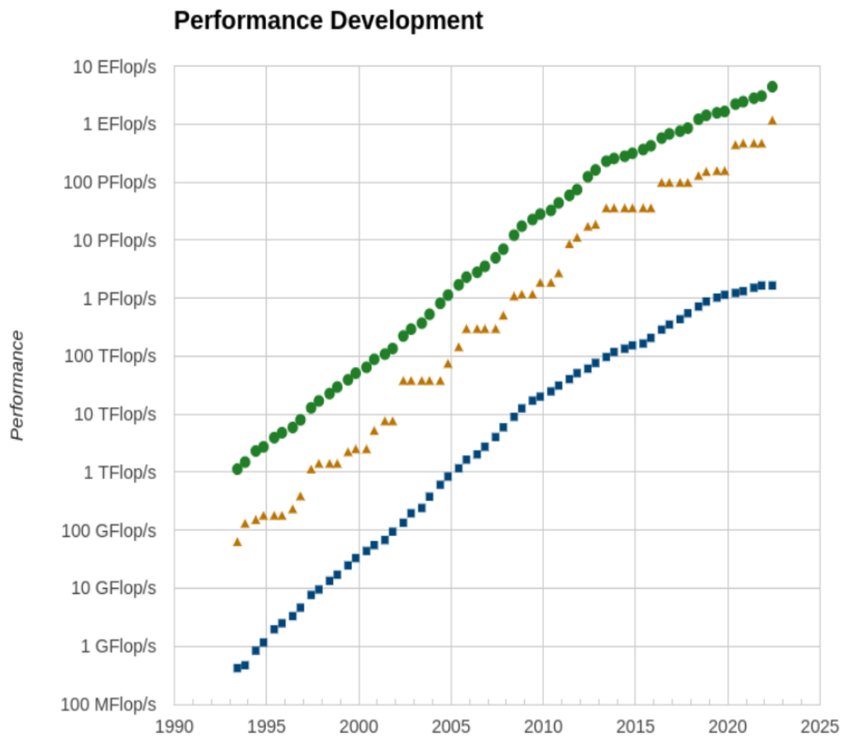

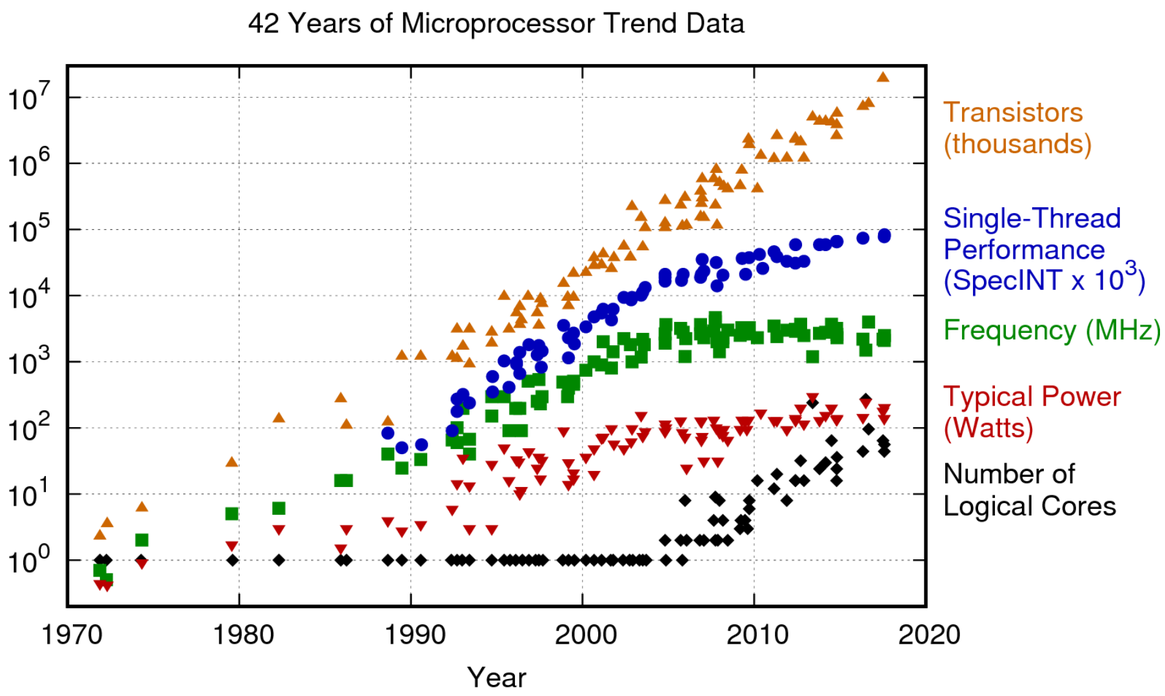

Original data up to the year 2010 collected and plotted by M. Horowitz, F. Labonte, O. Shacham, K. Olukotun, L. Hammond, and C. Batten
New plot and data collected for 2010-2017 by K. Rupp

Accelerators

- Specialized parallel hardware for compute-intensive operations
  - Co-processors for traditional CPUs
  - Based on highly parallel architectures
  - Graphics processing units (GPU) have been the most common accelerators during the last few years
- Promises
  - Very high performance per node
  - More FLOPS/Watt
- Usually major rewrites of programs required

Accelerator model today

- Local memory in GPU
  - Smaller than main memory (32 GB in Puhti, 64GB in LUMI)
  - Very high bandwidth (up to 3200 GB/s in LUMI)
  - Latency high compared to compute performance

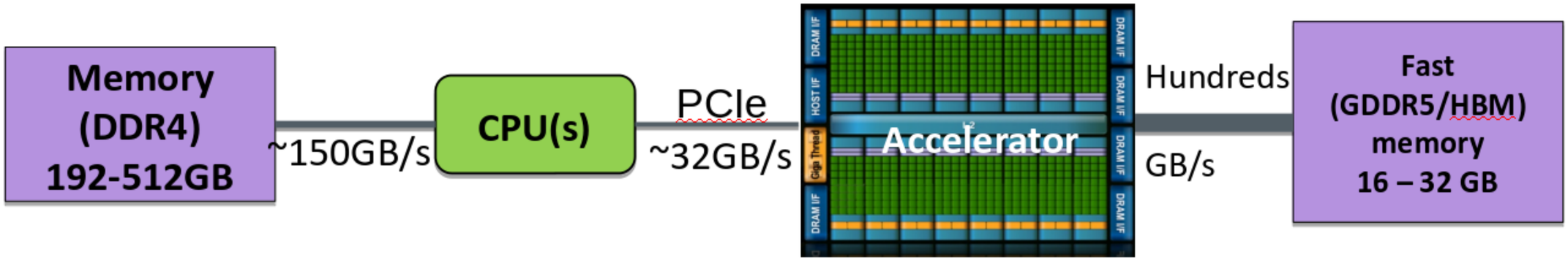

Lumi - Pre-exascale system in Finland

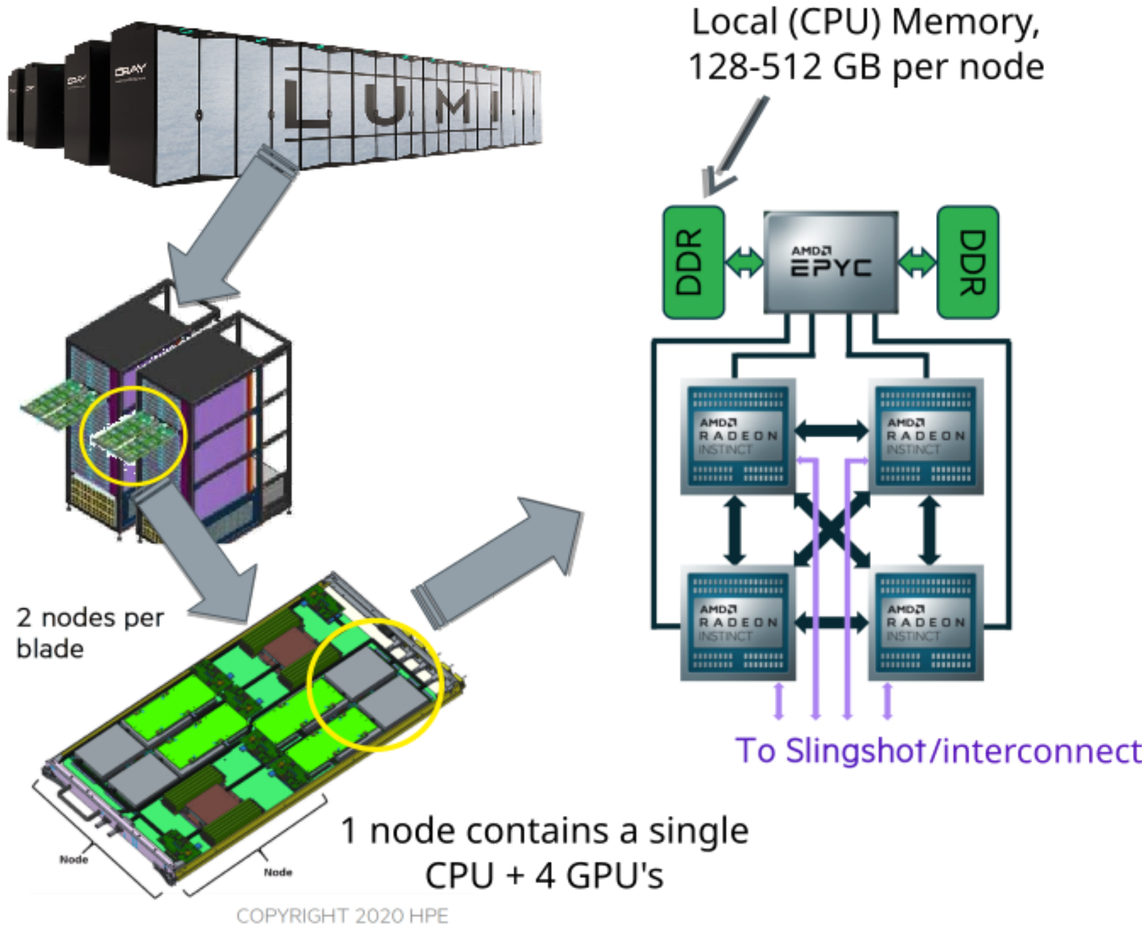

GPU architecture

- Designed for running tens of thousands of threads simultaneously on thousands of cores
- Very small penalty for switching threads
- Running large amounts of threads hides memory access penalties
- Very expensive to synchronize all threads

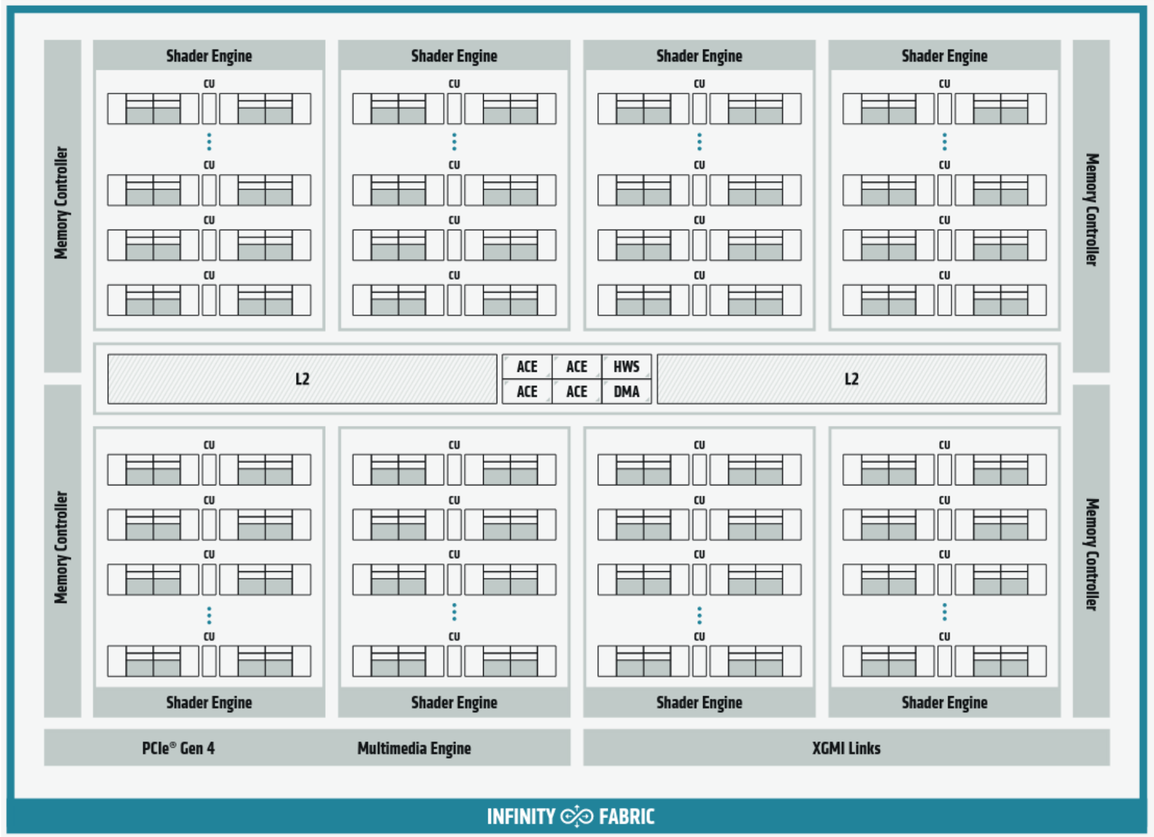

AMD Instinct MI100 architecture (source: AMD)

Challenges in using Accelerators

Applicability: Is your algorithm suitable for GPU?

Programmability: Is the programming effort acceptable?

Portability: Rapidly evolving ecosystem and incompatibilities between vendors.

Availability: Can you access a (large scale) system with GPUs?

Scalability: Can you scale the GPU software efficiently to several nodes?

Heterogeneous Programming Model

- GPUs are co-processors to the CPU
- CPU controls the work flow:
  - *offloads* computations to GPU by launching *kernels*
  - allocates and deallocates the memory on GPUs
  - handles the data transfers between CPU and GPUs
- CPU and GPU can work concurrently
  - kernel launches are normally asynchronous

Using GPUs

1. Use existing GPU applications
2. Use accelerated libraries
3. Directive based methods
   - OpenMP, OpenACC
4. High-level GPU programming
   - **SYCL**, **Kokkos**, …
5. Use direct GPU programming
   - CUDA, HIP, …

Easier, more limited

More difficult, more opportunities

GPUs @ CSC

- **Puhti-AI**: 80 nodes, total peak performance of 2.7 Petaflops
  - Four Nvidia V100 GPUs, two 20-core Intel Xeon processors, 3.2 TB fast local storage, network connectivity of 200Gbps aggregate bandwidth
- **Mahti-AI**: 24 nodes, total peak performance of 2. Petaflops
  - Four Nvidia A100 GPUs, two 64-core AMD Epyc processors, 3.8 TB fast local storage, network connectivity of 200Gbps aggregate bandwidth
- **LUMI-G**: 2560 nodes, total peak performance of 500 Petaflops
  - Four AMD MI250X GPUs, one 64-core AMD Epyc processor, network connectivity of 800Gbps aggregate bandwidth

Summary

- GPUs can provide significant speed-up for many applications
  - High amount of parallelism required for efficient utilization of GPUs
- GPUs are co-processors to CPUs
  - CPU offloads computations to GPUs and manages memory
- Programming models for GPUs
  - Directive based methods: OpenACC, OpenMP
  - Frameworks: Kokkos, SYCL
  - C++ language extensions: CUDA, HIP