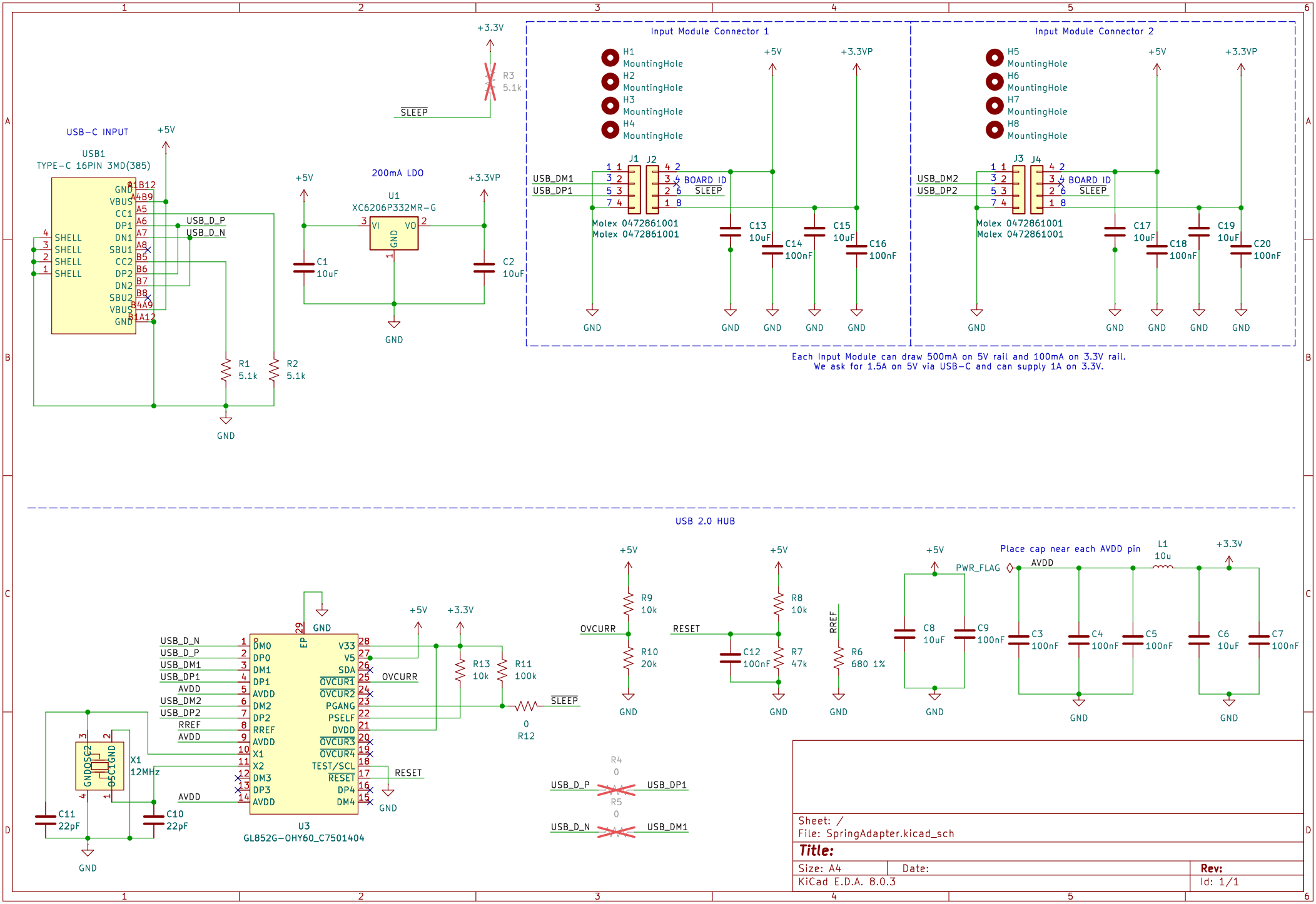
USB-C INPUT
USB1
TYPE-C 16PIN 3MD(385)
+5V
GND
SHELL
VBUS
CC1
DP1
DN1
SBU1
CC2
DP2
DN2
SBU2
USB_D_P
USB_D_N
R1
5.1k
R2
5.1k
200mA LDO
U1
XC6206P332MR-G
VI
VO
C1
10uF
C2
10uF
+3.3VP
+3.3V
R3
5.1k
SLEEP
Input Module Connector 1
H1
MountingHole
H2
MountingHole
H3
MountingHole
H4
MountingHole
J1
J2
USB_DM1
USB_DP1
BOARD ID
Molex 0472861001
Molex 0472861001
C13
10uF
C14
100nF
C15
10uF
C16
100nF
Input Module Connector 2
H5
MountingHole
H6
MountingHole
H7
MountingHole
H8
MountingHole
J3
J4
USB_DM2
USB_DP2
C17
10uF
C18
100nF
C19
10uF
C20
100nF
Each Input Module can draw 500mA on 5V rail and 100mA on 3.3V rail.
We ask for 1.5A on 5V via USB-C and can supply 1A on 3.3V.
USB 2.0 HUB
U3
GL852G-OHY60_C7501404
DM0
DP0
DM1
DP1
AVDD
DM2
DP2
RREF
X1
X2
DM3
DP3
V33
V5
SDA
OVCURR
OVCURR1
OVCURR2
PGANG
PSELF
DVDD
OVCURR3
OVCURR4
TEST/SCL
RESET
DP4
DM4
EP
X1
12MHz
C11
22pF
C10
22pF
R13
10k
R11
100k
0
R12
R9
10k
R10
20k
R8
10k
R7
47k
C12
100nF
R6
680 1%
R4
0
R5
0
USB_D_P
USB_DP1
USB_D_N
USB_DM1
PWR_FLAG
Place cap near each AVDD pin
L1
10u
C8
10uF
C9
100nF
C3
100nF
C4
100nF
C5
100nF
C6
10uF
C7
100nF
Sheet: /
File: SpringAdapter.kicad_sch
Title:
Size: A4
Date:
Rev:
KiCad E.D.A. 8.0.3
Id: 1/1