# Computing with Transistors

Dr. Charles R. Severance

www.ca4e.com

online.dr-chuck.com

# Outline

- The transistor replacing tubes in digital applications
  - Faster than a relay or tube
  - Far less heat and electricity
  - More reliable and long lasting
  - No moving parts
- Amplifiers, Tubes and Transistors – It's complicated
  - Transistor radios
- Evolution of transistor technology and manufacturing
  - BJT -> PMOS -> NMOS -> CMOS
- The "digital logic gate" abstraction

# Valves / Tubes / Vacuum Tubes

- The first purely electronic devices to store data and do computations were called "Valves" in the UK
  - About 1000 times faster than physical relays
- Designed to amplify analog signals
- Early application long distance analog telephone calls – needed an amplifier every 10 miles or so
- Tube was invented in 1912 Dr. Lee De Forest

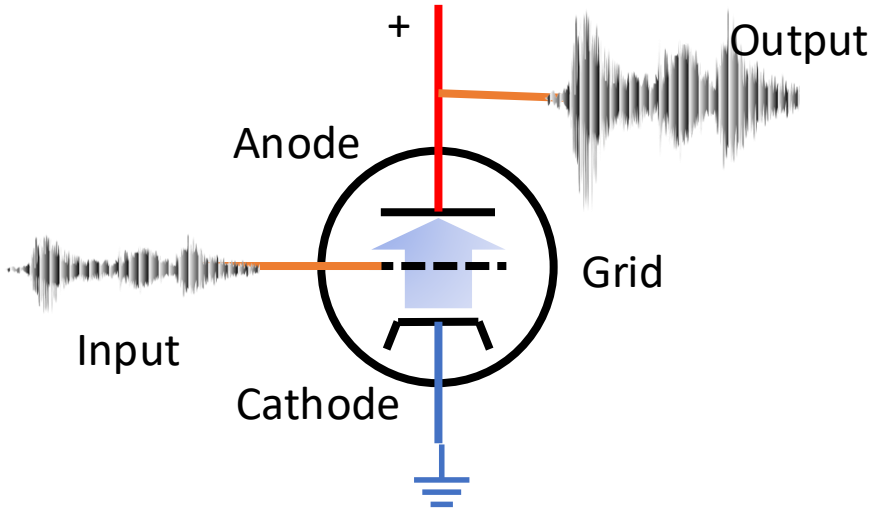


https://en.wikipedia.org/wiki/Vacuum_tube

# 6CG8A

**TUNG-SOL**

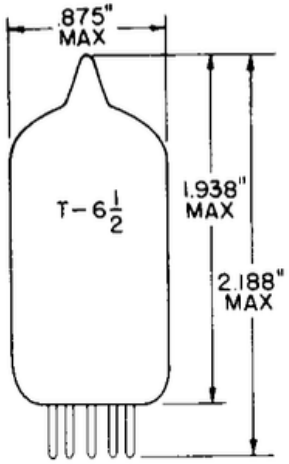


GLASS BULB
MINIATURE BUTTON
9 PIN BASE E9-1
OUTLINE DRAWING
JEDEC 6-2

## TRIODE PENTODE

MINIATURE TYPE

UNIPOTENTIAL CATHODE

HEATER

6.3 VOLTS 450±30 MA.

AC OR DC

ANY MOUNTING POSITION

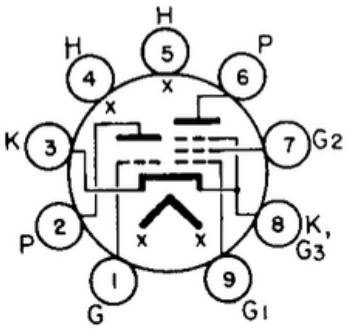


BOTTOM VIEW
BASING DIAGRAM
JEDEC 9GF

https://frank.pocnet.net/sheets/127/6/6CG8A.pdf

THE 6CG8A CONTAINS A MEDIUM-MU TRIODE AND SHARP CUTOFF PENTODE IN THE 9-PIN MINIATURE CONSTRUCTION. IT IS DESIGNED PRIMARILY FOR USE AS A COMBINED OSCILLATOR AND MIXER IN TELEVISION RECEIVERS UTILIZING AN INTERMEDIATE FREQUENCY IN THE ORDER OF 40 MC. THERMAL CHARACTERISTICS OF THE HEATER ARE CONTROLLED SUCH THAT HEATER VOLTAGE SURGES DURING THE WARM-UP CYCLE ARE MINIMIZED PROVIDED IT IS USED WITH OTHER TYPES WHICH ARE SIMILARLY CONTROLLED.

# Building "Digital" Valves / Tubes

- The design of tubes could be tweaked so to move quickly from low voltage to high voltage as the input voltage increased
  - Voltage low = off
  - Voltage high = on
- With the correct design, a range of slightly lower input would be lifted on output

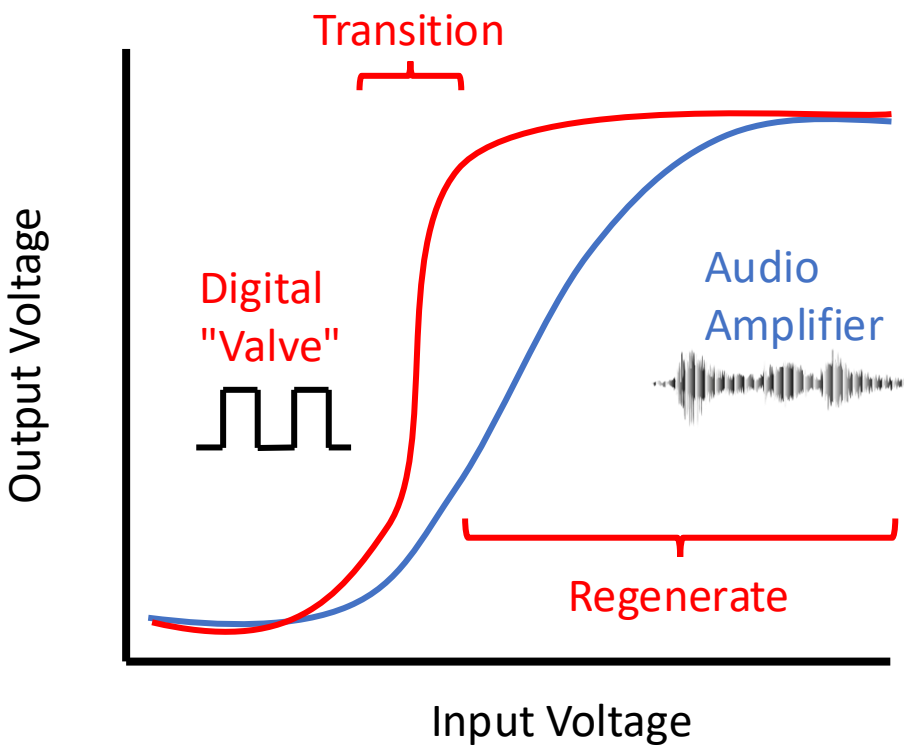

# Flaws of Valves

- Take lots of power
- Lots of heat because tubes had an internal heater that helped release electrons from the cathode.
- Physically large
- Expensive to manufacture
- Soft electronic glow in the dark

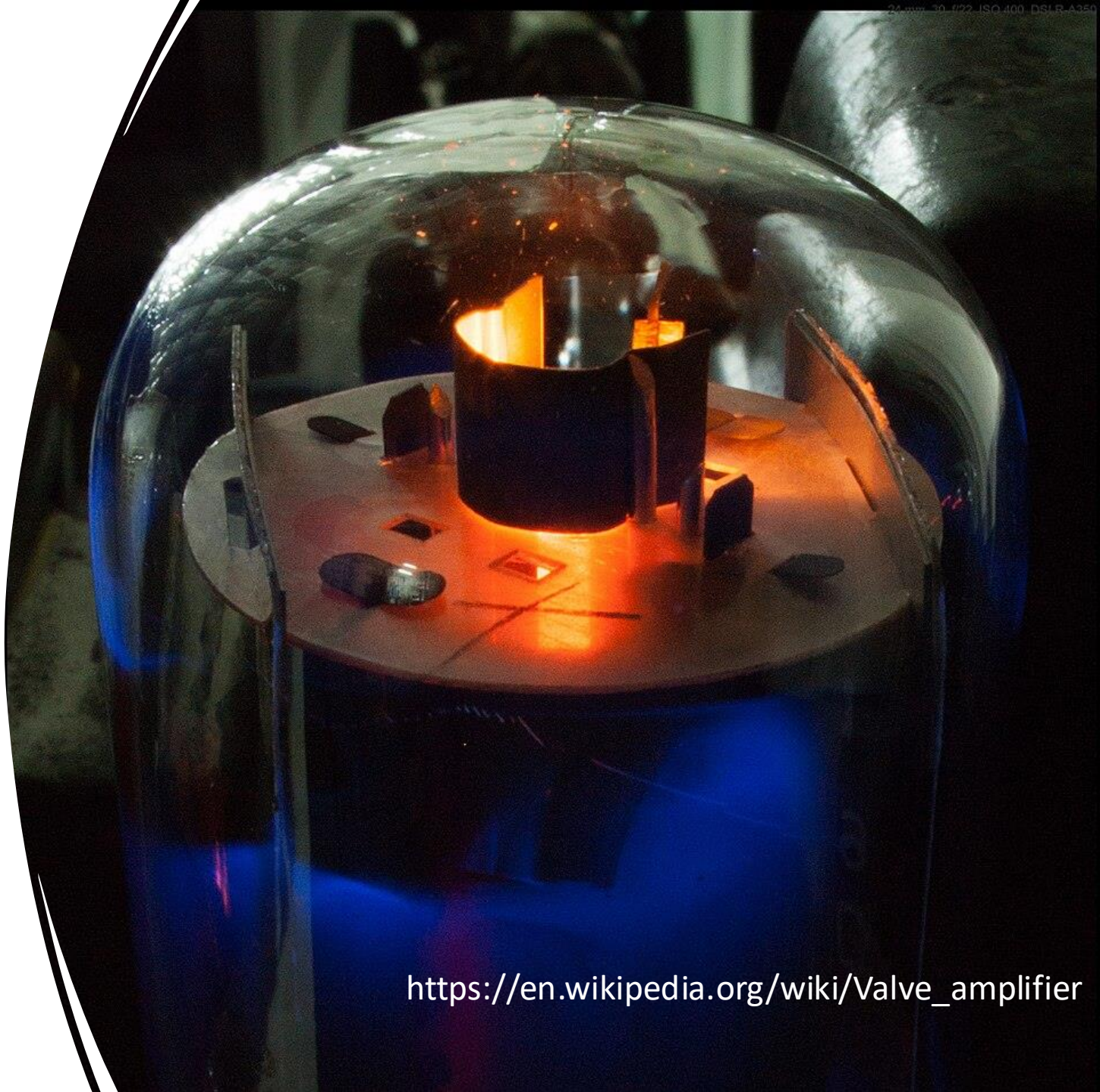

https://en.wikipedia.org/wiki/Valve_amplifier

# Semi-Conductors

# Transistors

- Building a better Triode (Tube)
- Three kinds of materials w.r.t electricity
  - Conducting like metal
  - Insulating like plastic
  - Semi-conductor
- Certain crystalline materials like silicon can be modified by adding impurities (‘doping’) so they conduct electricity under certain conditions — hence, *semiconductors*.

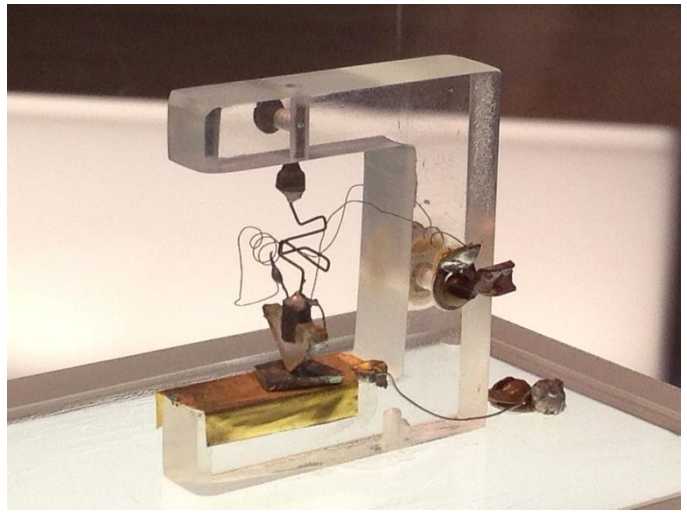

https://en.wikipedia.org/wiki/Transistor
https://commons.wikimedia.org/wiki/File:1st-Transistor.jpg

# Nobel Prize!

- Transistors are constructed by layering crystals with carefully designed impurities
  - Silicon with N-Doping
  - Silicon with P-Doping
- When voltages are applied to the crystals, sub-atomic stuff happens at the boundaries between the different types of crystals that affect the flow of electrons through the crystals

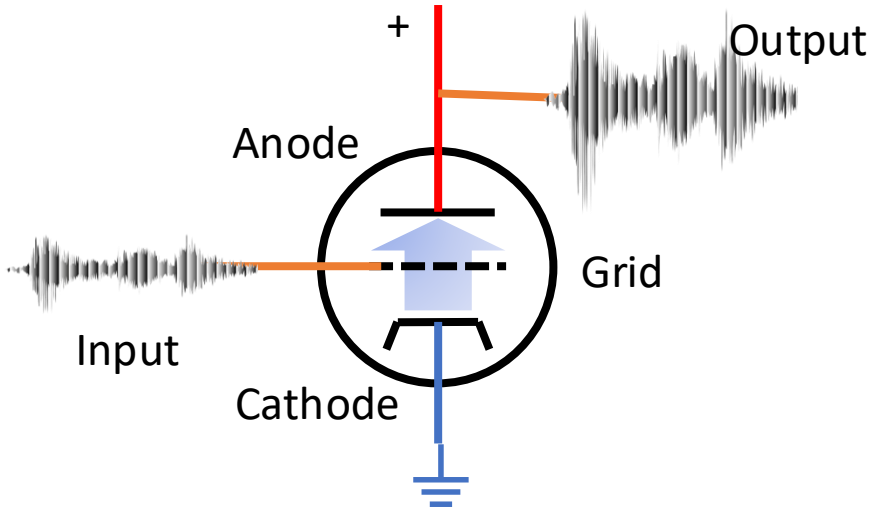


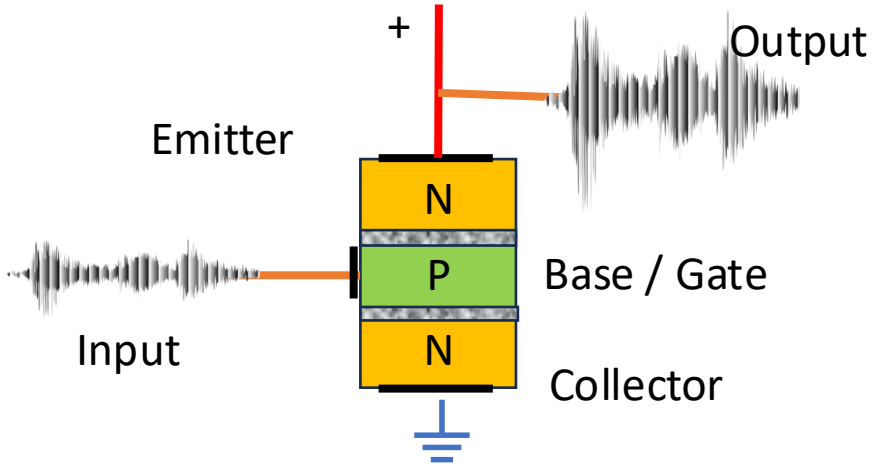


https://en.wikipedia.org/wiki/Nobel_Prize_in_Physics

# Transistor audio amplifiers – not so simple

- A typical transistor amplifier (whether NMOS or BJT) inverts the signal — so an additional stage is used to restore phase.
- A few more transistors improve the quality of the amplified signal.

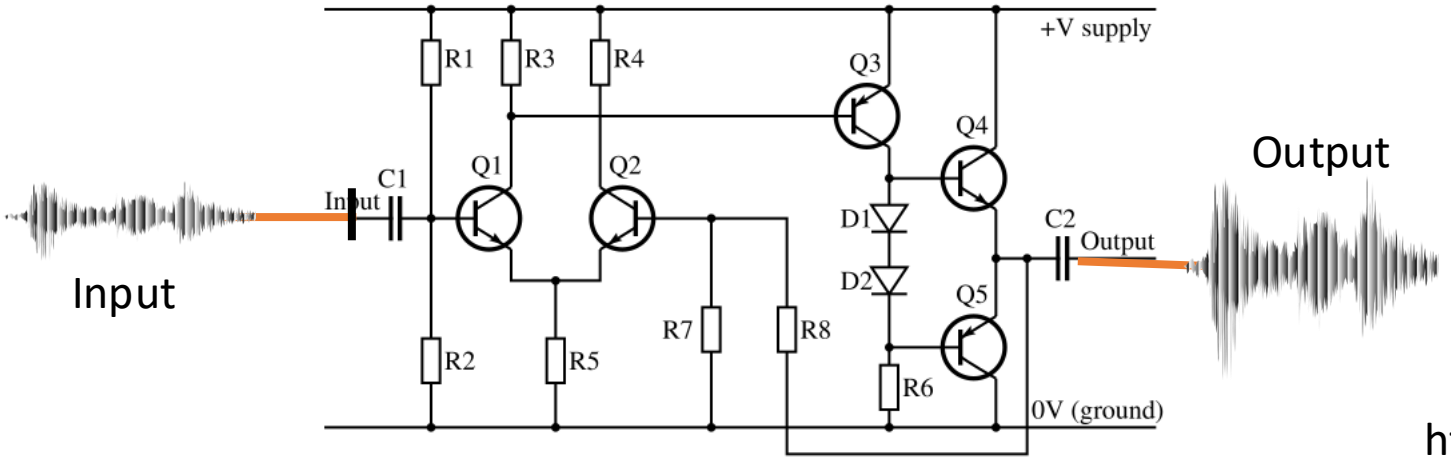


https://en.wikipedia.org/wiki/Amplifier

# Transistor Radios

- Once amplifier style transistors were available, during the 1940's there was an effort to build small, battery-powered "transistor radios"
- Often the marketing included the number of transistors – "The Sony TR-826 radio has eight transistors!"

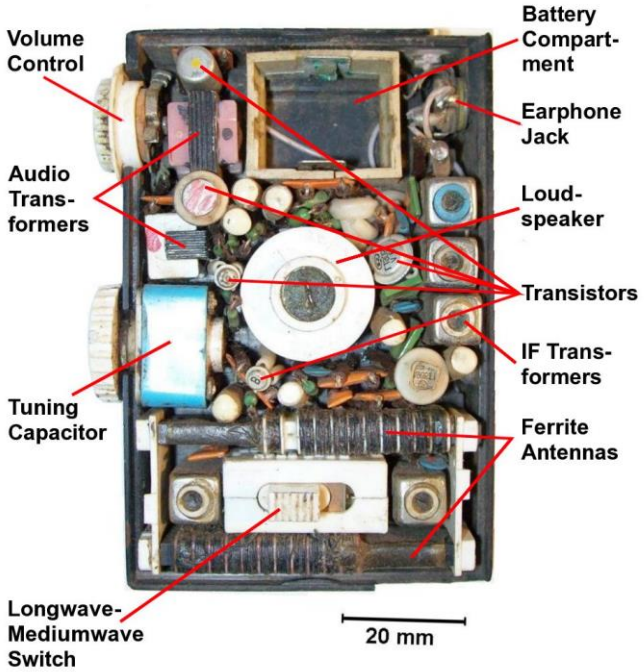


https://en.wikipedia.org/wiki/Transistor_radio

# Hi End Tube-Based Audio Amplifiers

- Many and professional musical performers feel that that amplifiers that use tubes produce better sound with less distortion
- New high-end audio amplifiers can cost upwards of $50,000

- This is not an audio class  - so back to digital logic ☺

https://en.wikipedia.org/wiki/Valve_amplifier

Macintosh MC240 - $3500

# Building "Digital" Transistors

- The design of transistors could be tweaked to move quickly from high voltage to low voltage as the input voltage increased
  - Voltage low = off
  - Voltage high = on
- With the right design, a range of slightly lower input would be corrected on output
- AI: Difference between a Bipolar Junction Transistor and NMOS transistor

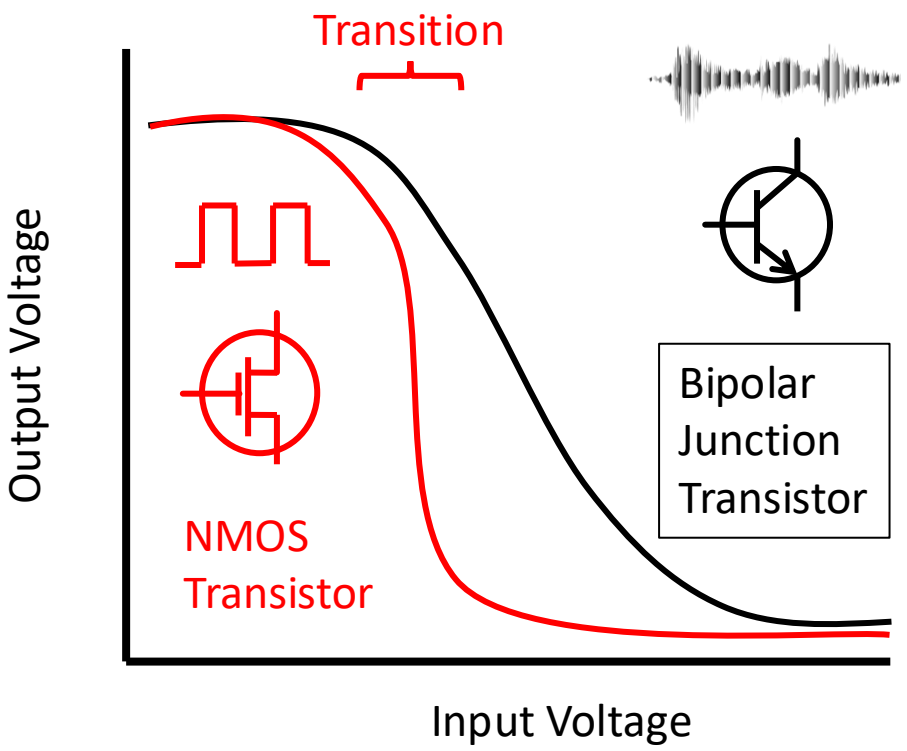

# Two Kinds of "Digital" Transistors

- NMOS conducts when the input (gate) voltage is high
- PMOS conducts when the input is low.
- Modern chips use both
- CMOS – Complementary Metal-Oxide-Semiconductor

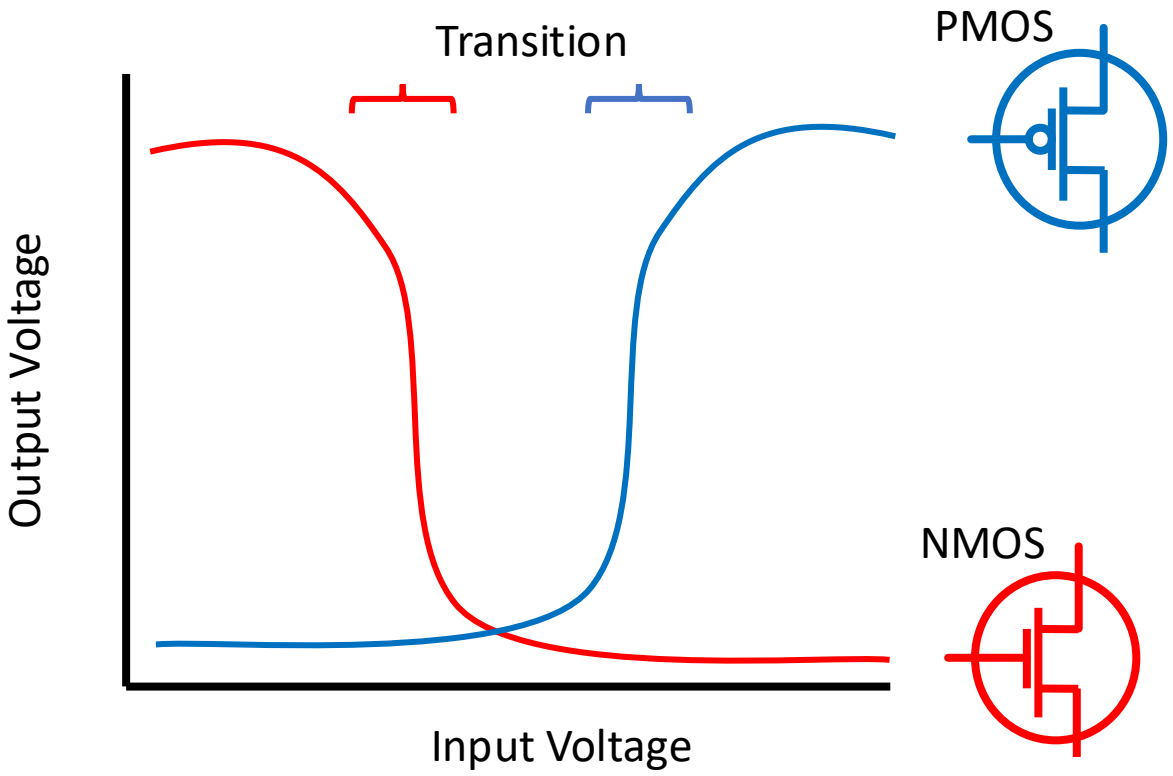


https://en.wikipedia.org/wiki/MOSFET

# The Four Eras of Transistor Manufacturing

| Approx. Years | Dominant Technology | Key Feature | Processors | Limitation that Led to Next Step |
|---|---|---|---|---|
| 1950s–1960s | **Bipolar Junction Transistor (BJT)** | Fast and well-understood | | Power-hungry, hard to integrate |
| Late 1960s–early 1970s | **PMOS** | Easier to fabricate MOS logic | Intel 4004 | Slow, used negative voltages |
| 1973–1983 | **NMOS** | Faster, simpler power supply | Intel 8080<br>Zilog Z-80 | Still wasted static power |
| 1983–present | **CMOS** | Extremely low power, scalable | Intel 486 | Became universal |

ChatGPT: Describe the historical timeline for the transition from Bipolar Junction Transistor (BPT) to Complementary Metal-Oxide-Semiconductor (CMOS) transistor technology.

# From Transistors to Gates

# We use transistors to implement "gates"

- When we build digital logic we think in terms of **abstractions** that we call "gates"
- Gates let us think about in 1's and 0's instead of voltages
- The simplest gate is a "not" gate where the output is the opposite of the input
- It demonstrates a circuit that reacts – like a simple "if" statement
- We will build more complex logic circuits

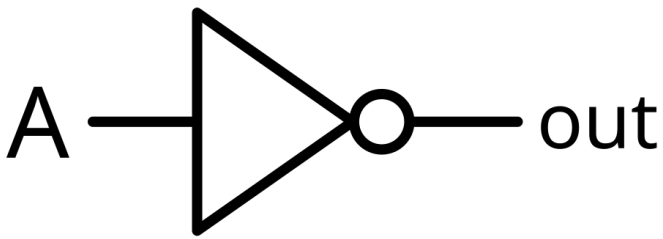


| Input | Output |
|---|---|
| 0 | 1 |
| 1 | 0 |

https://en.wikipedia.org/wiki/Inverter_(logic_gate)

# Not gates over time..

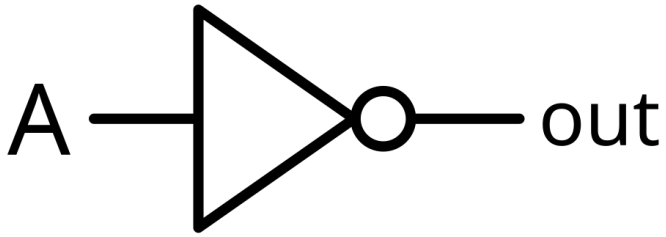


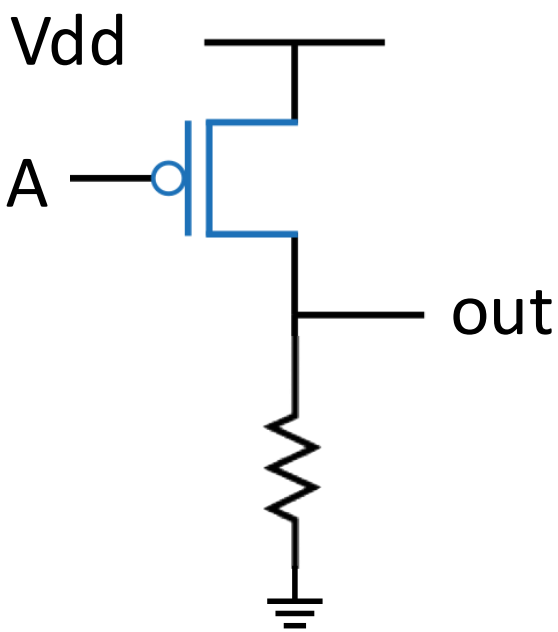


PMOS - 1972

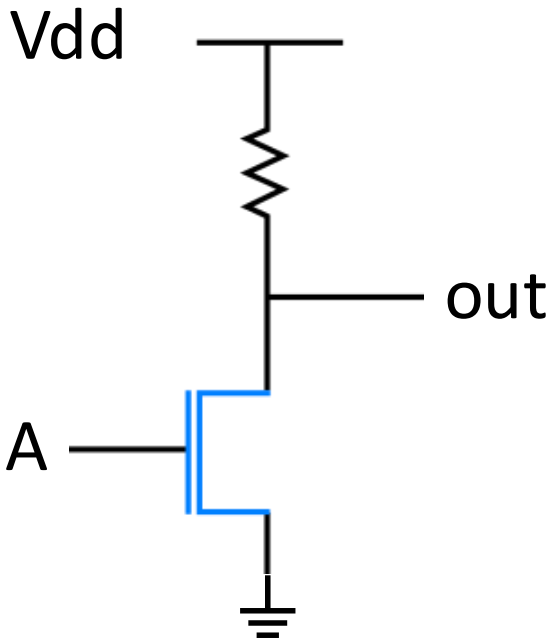


NMOS - 1978

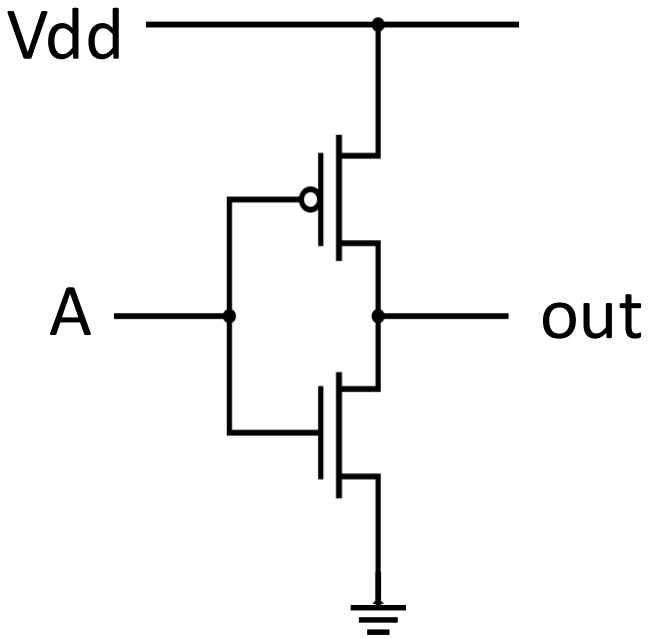


CMOS - 1983

# Not gates over time..

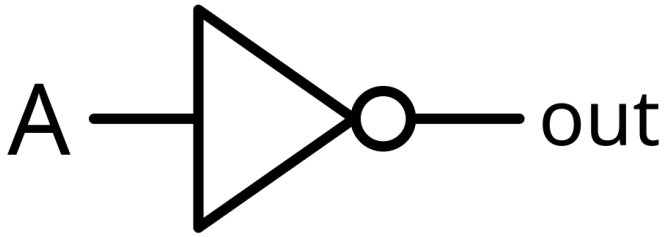


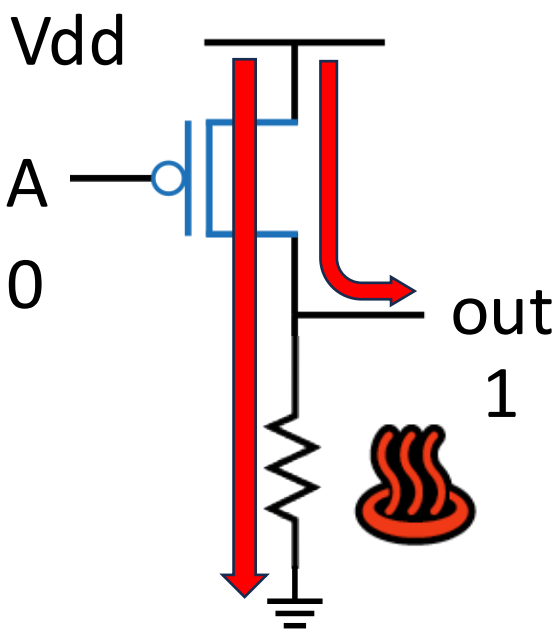


PMOS - 1972

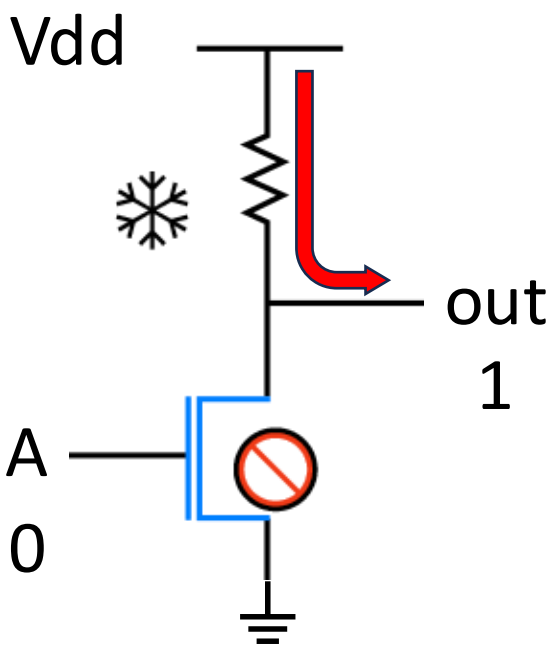


NMOS - 1978

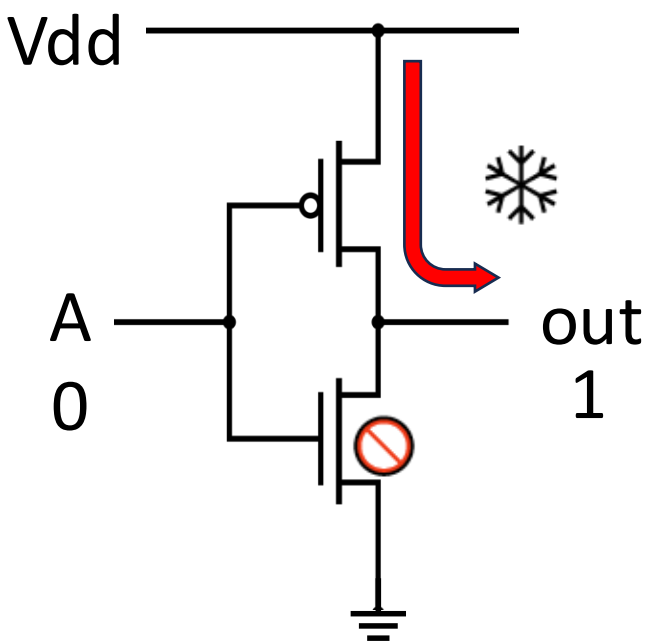


CMOS - 1983

# Not gates over time..

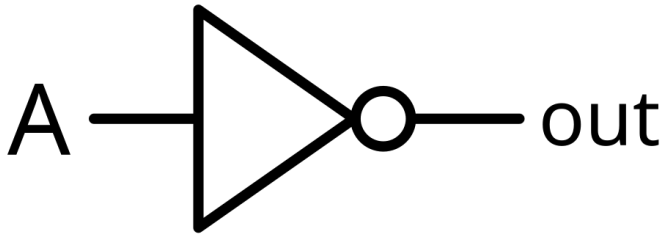


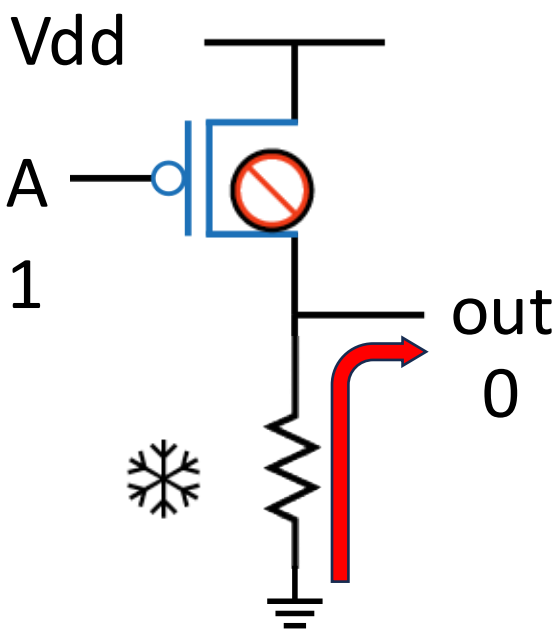


PMOS - 1972

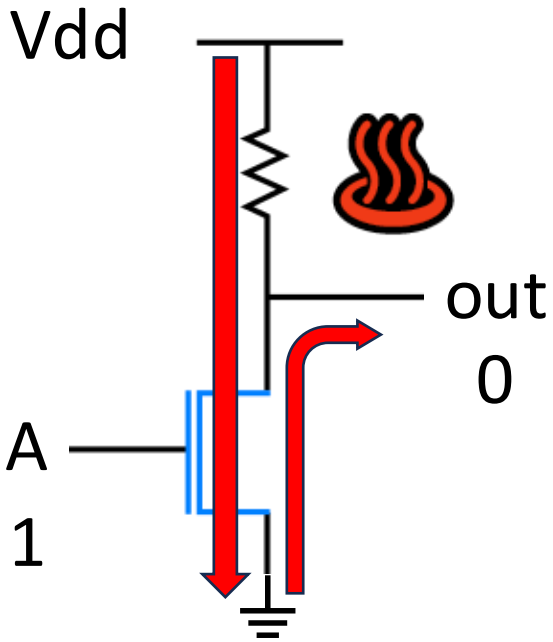


NMOS - 1978

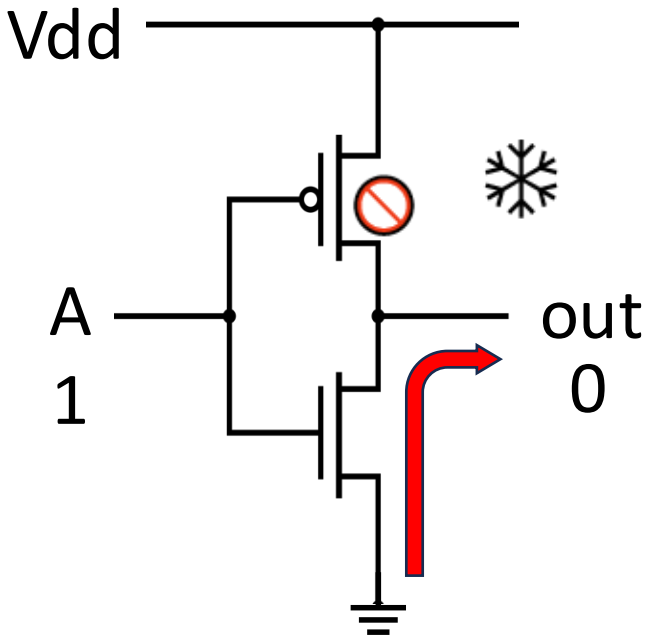


CMOS - 1983

# TL;DR – Not Gates Over Time

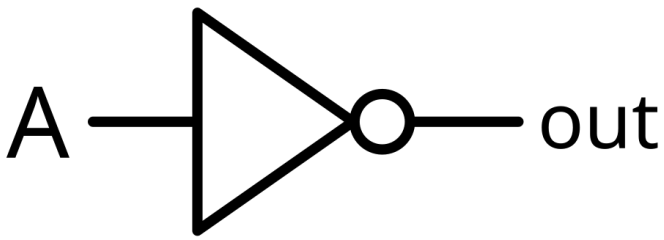


- Before the 1980's, logic gates built from transistors were slow, had low density, took a lot of heat and took a lot of power.
- When CMOS was practical in the 1980s, CPUS went from the size of large cabinets to single chips
- As size reduced things got much faster

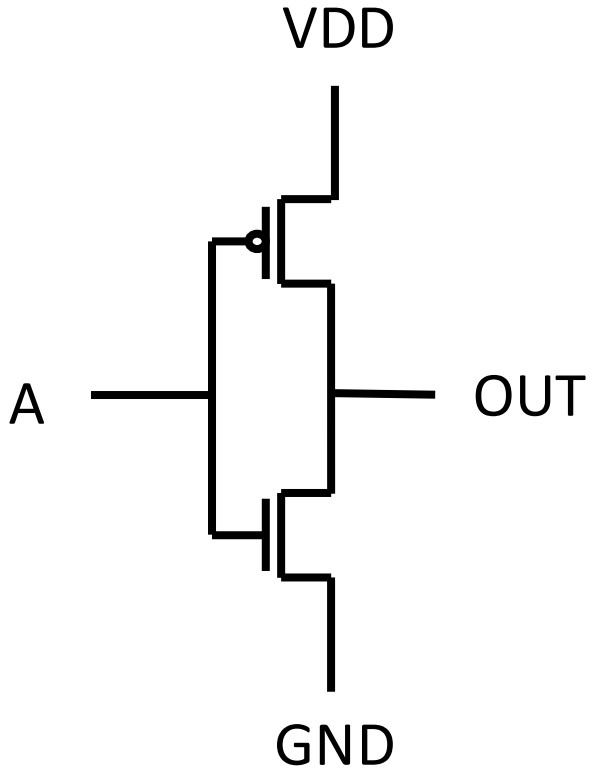


- From now on we will only speak of CMOS ☺

# Layout a CMOS NOT Gate (Demo)

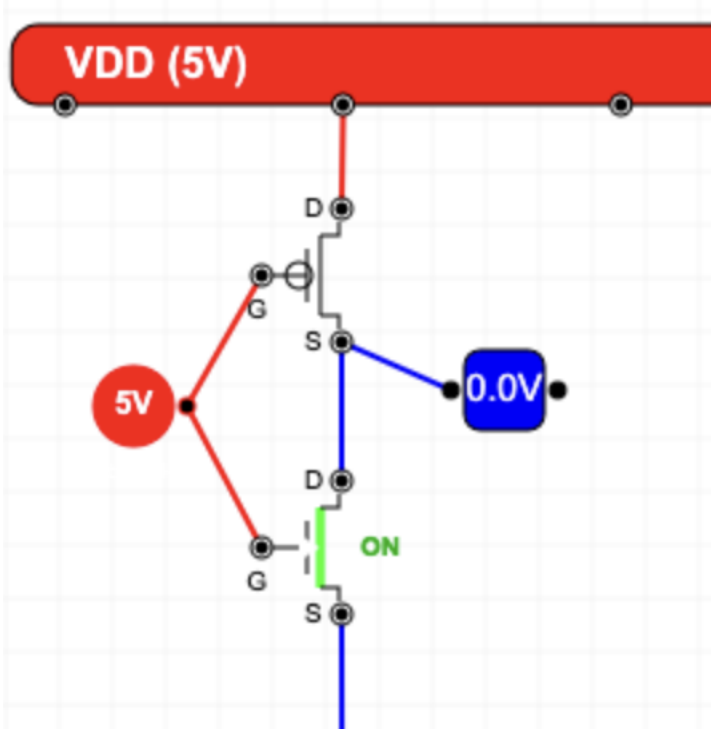


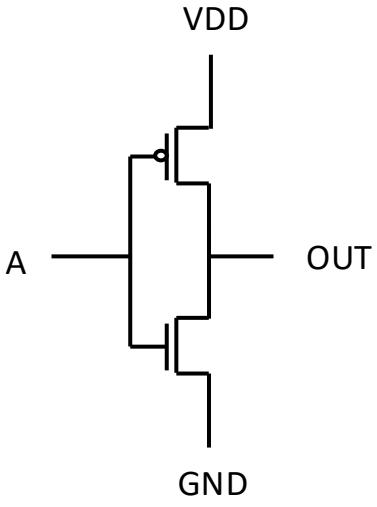


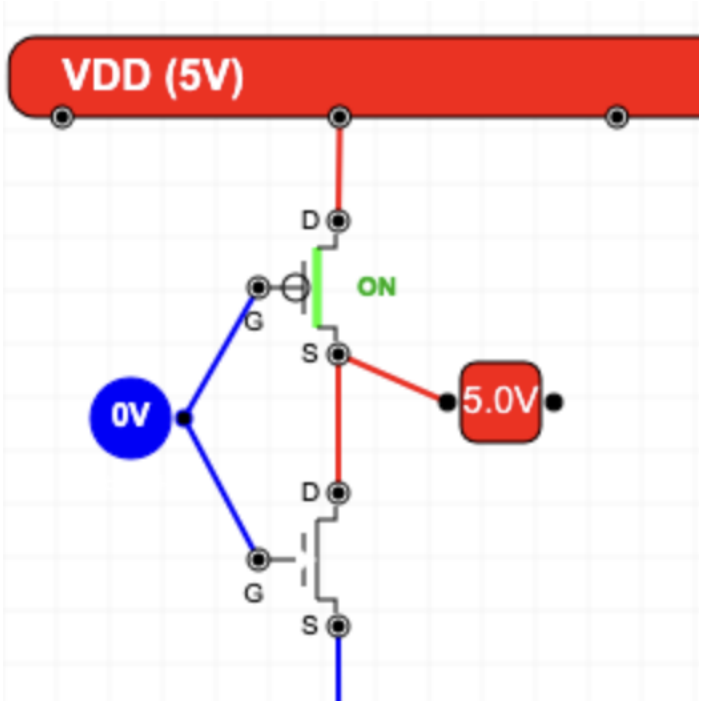


https://www.ca4e.com/tools/cmos/

# Digital Logic

- To design more complex circuits from half-adders to CPUs it is much easier to think in terms of gates than transistors
- Gates are an abstraction
  - On / OFF or 1 / 0
- The basic gates come from mathematical logic (and IF statements)
  - Not / And / Or / Exclusive Or
- We also talk about gates that can be built with fewer transistors
  - NAND / NOR

# Classic Mathematical Logic Gates

## Not

| A | Q |
|---|---|
| 0 | 1 |
| 1 | 0 |

Two transistors

## And

| A | B | Q |
|---|---|---|
| 0 | 0 | 0 |
| 0 | 1 | 0 |
| 1 | 0 | 0 |
| 1 | 1 | 1 |

Six transistors

## Or

| A | B | Q |
|---|---|---|
| 0 | 0 | 0 |
| 0 | 1 | 1 |
| 1 | 0 | 1 |
| 1 | 1 | 1 |

Six transistors

## Exclusive Or

| A | B | Q |
|---|---|---|
| 0 | 0 | 0 |
| 0 | 1 | 1 |
| 1 | 0 | 1 |
| 1 | 1 | 0 |

Eight transistors

# NAND and NOR
# Fewer transistors

NAND

| A | B | Q |
|---|---|---|
| 0 | 0 | 1 |
| 0 | 1 | 1 |
| 1 | 0 | 1 |
| 1 | 1 | 0 |

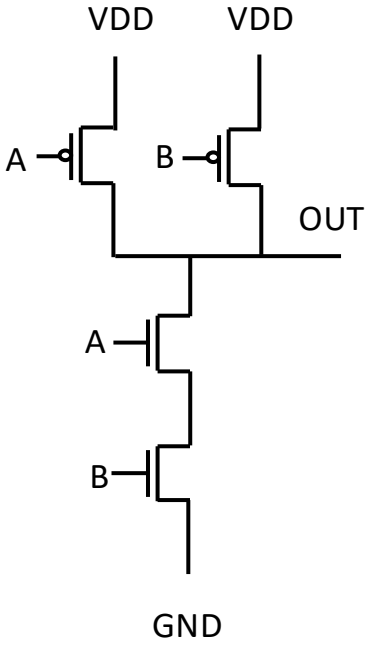


Four transistors

NOR

| A | B | Q |
|---|---|---|
| 0 | 0 | 1 |
| 0 | 1 | 0 |
| 1 | 0 | 0 |
| 1 | 1 | 0 |

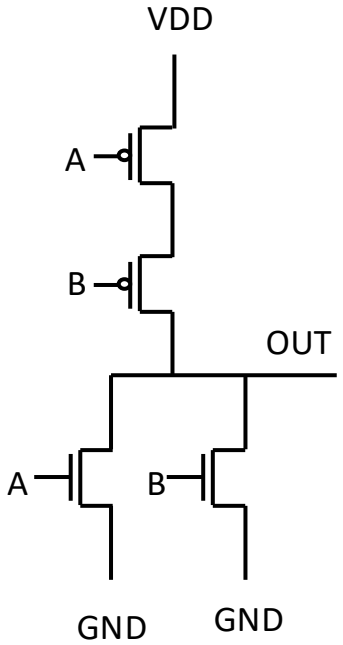


Four transistors

# Layout a CMOS NAND Gate

| A | B | Q |
|---|---|---|
| 0 | 0 | 1 |
| 0 | 1 | 1 |
| 1 | 0 | 1 |
| 1 | 1 | 0 |

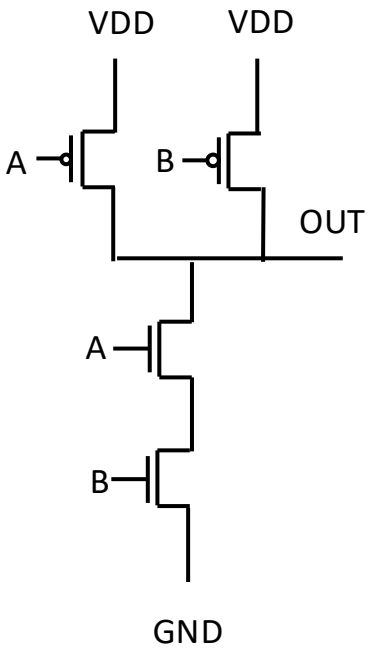


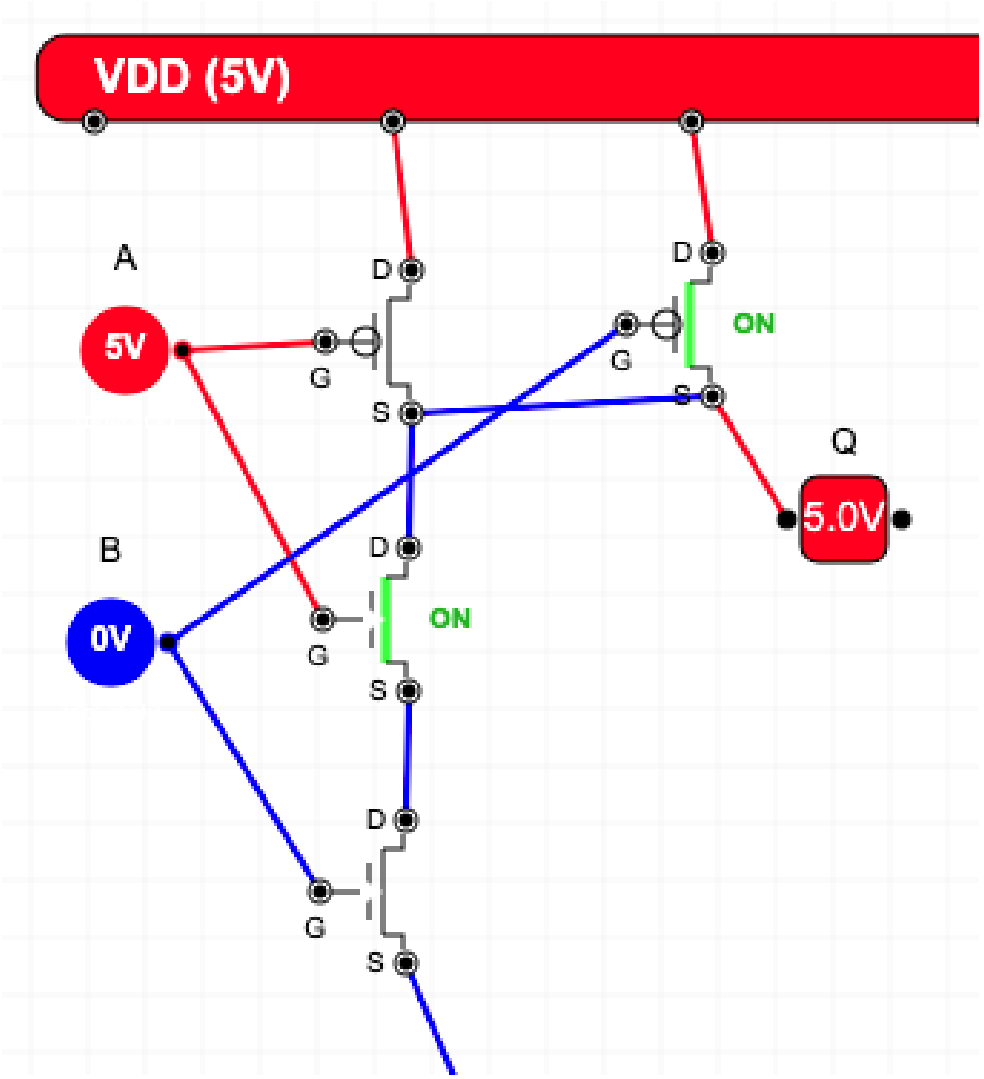

# Sneak Peek: Digital Logic Design

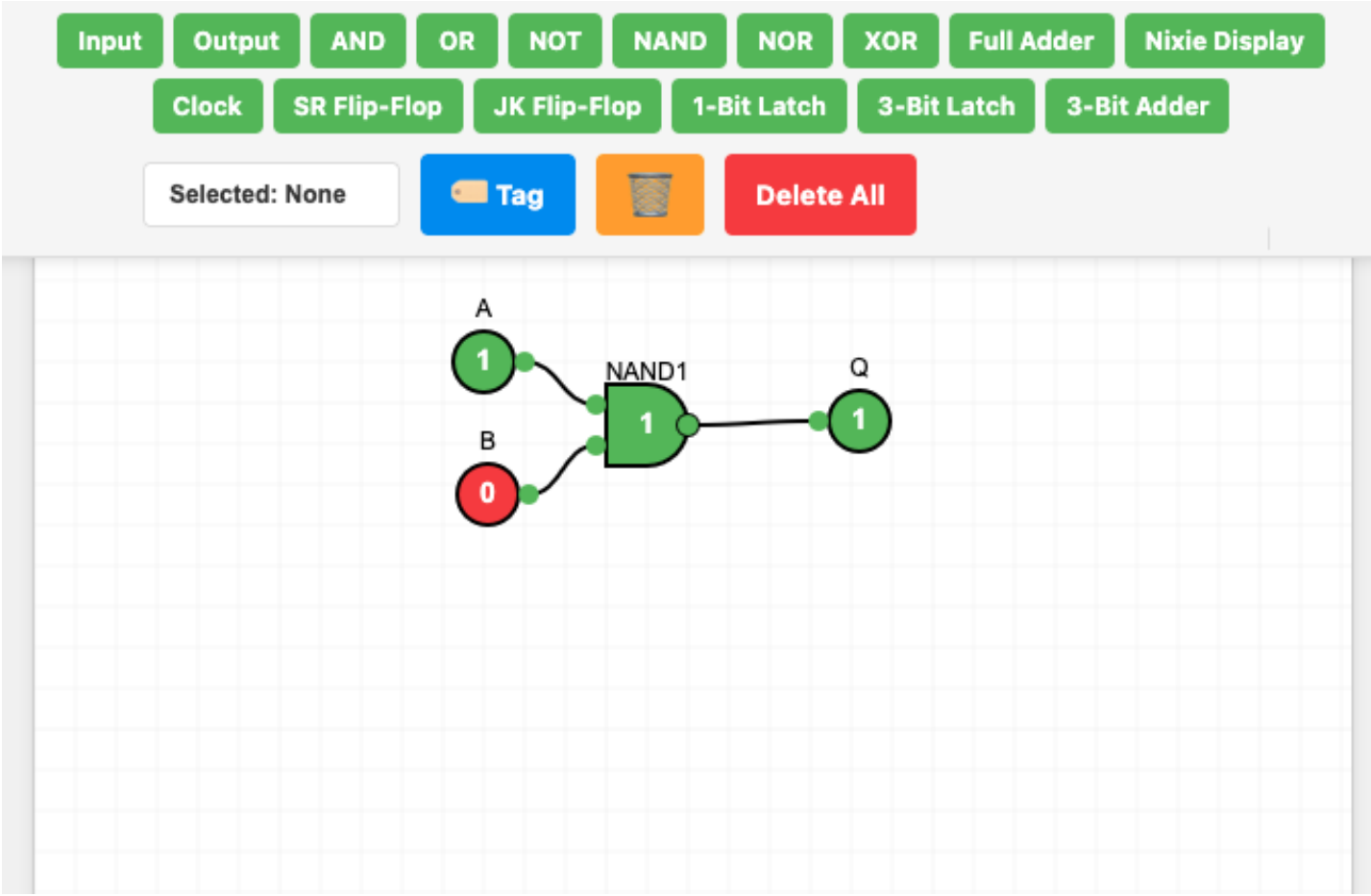

# Summary

- Semiconductors
- Tuning tubes and transistor for digital applications (as compared to amplifier applications)
- Building gates from transistors
- Transistor technology evolution PMOS, NMOS and CMOS logic

# Acknowledgements / Contributions

These slides are Copyright 2025- Charles R. Severance (online.dr-chuck.com) as part of www.ca4e.com and made available under a Creative Commons Attribution 4.0 License. Please maintain this last slide in all copies of the document to comply with the attribution requirements of the license. If you make a change, feel free to add your name and organization to the list of contributors on this page as you republish the materials.

Initial Development: Charles Severance, University of Michigan School of Information

**Insert new Contributors and Translators here including names and dates**

**Continue new Contributors and Translators here**