Digital Logic

Dr. Charles R. Severance

www.ca4e.com

online.dr-chuck.com

Outline

- What is Computer Architecture
- What is a Central Processing Unit (CPU)
- Start with gates - AND / OR / NOT / XOR …
- Adding numbers with gates – half and full adders
- Number representation – Base 2 and Base 10 (hexadecimal)
- Storing data with gates – Latches and Flip-Flops

Computer Architecture

- Within the computer data is moved using electric wires
- Each wire generally has a voltage that is either a "0" or "1"
- Wires connect components like the CPU, Memory, or other devices

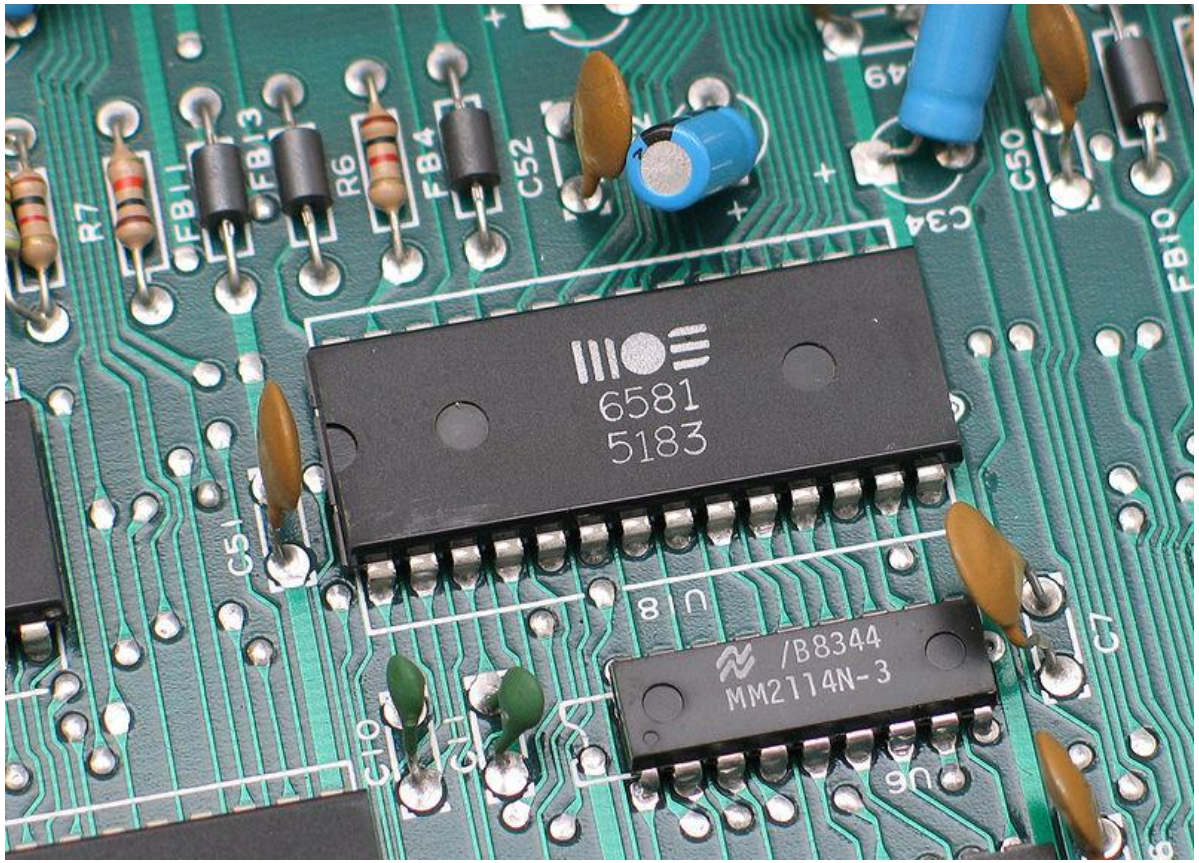

A sound chip from a 1980's Commodore 64 connected to the motherboard

https://en.wikipedia.org/wiki/Printed_circuit_board

Generic Computer

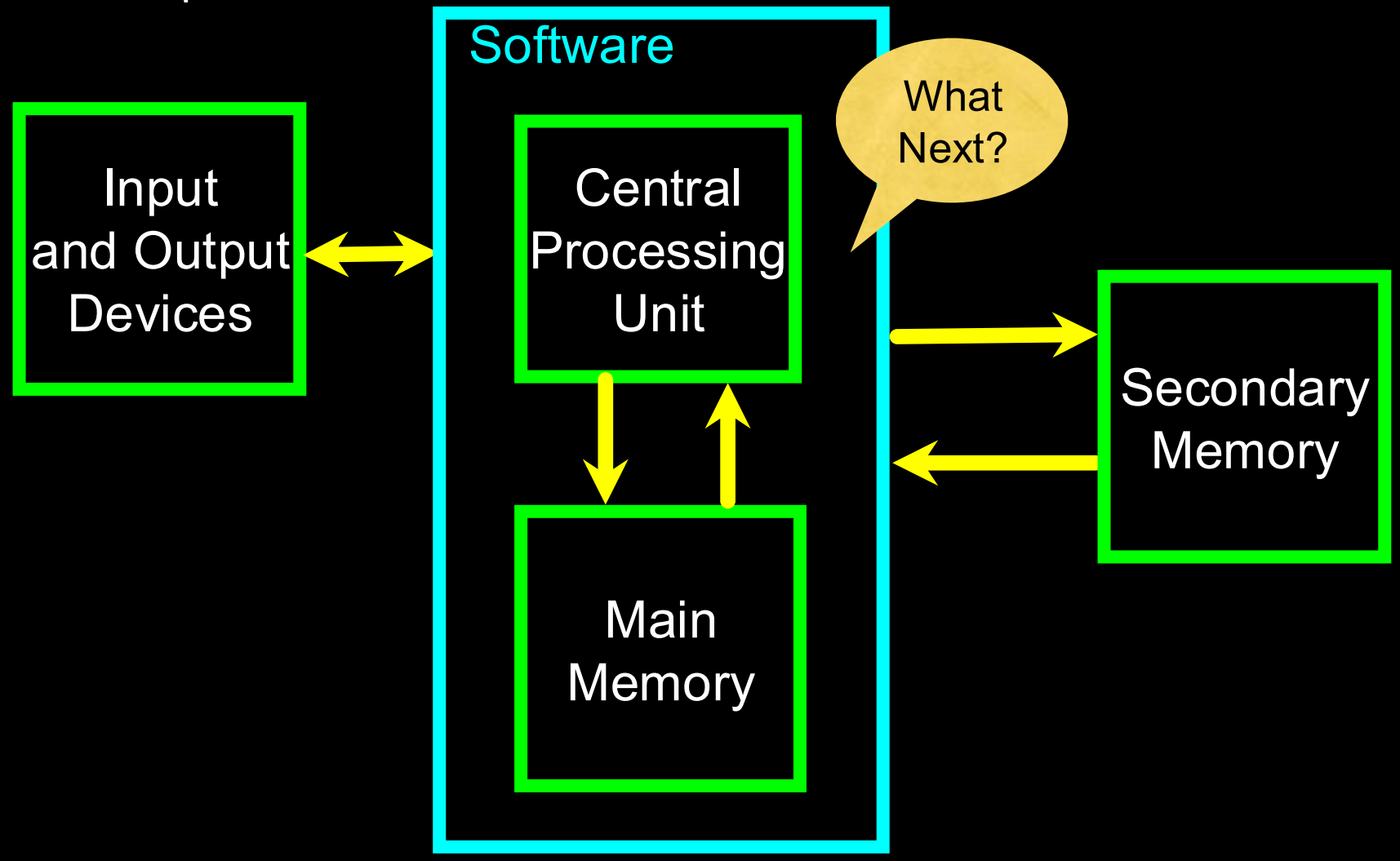

Definitions

- Central Processing Unit: Runs the Program - The CPU is always wondering “what to do next”. Not the brains exactly - very dumb but very very fast

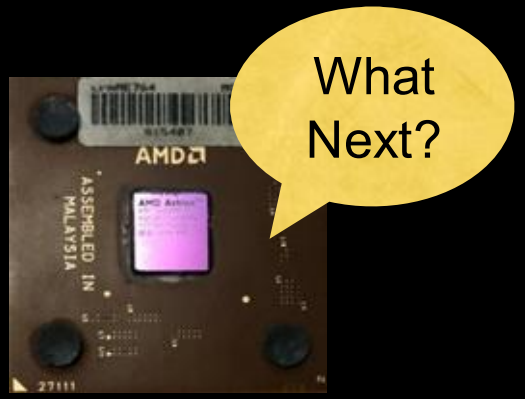

- Input Devices: Keyboard, Mouse, Touch Screen
- Output Devices: Screen, Speakers, Printer, DVD Burner
- Main Memory: Fast small temporary storage - lost on reboot - aka RAM
- Secondary Memory: Slower large permanent storage - lasts until deleted - disk drive / memory stick

A Programmer

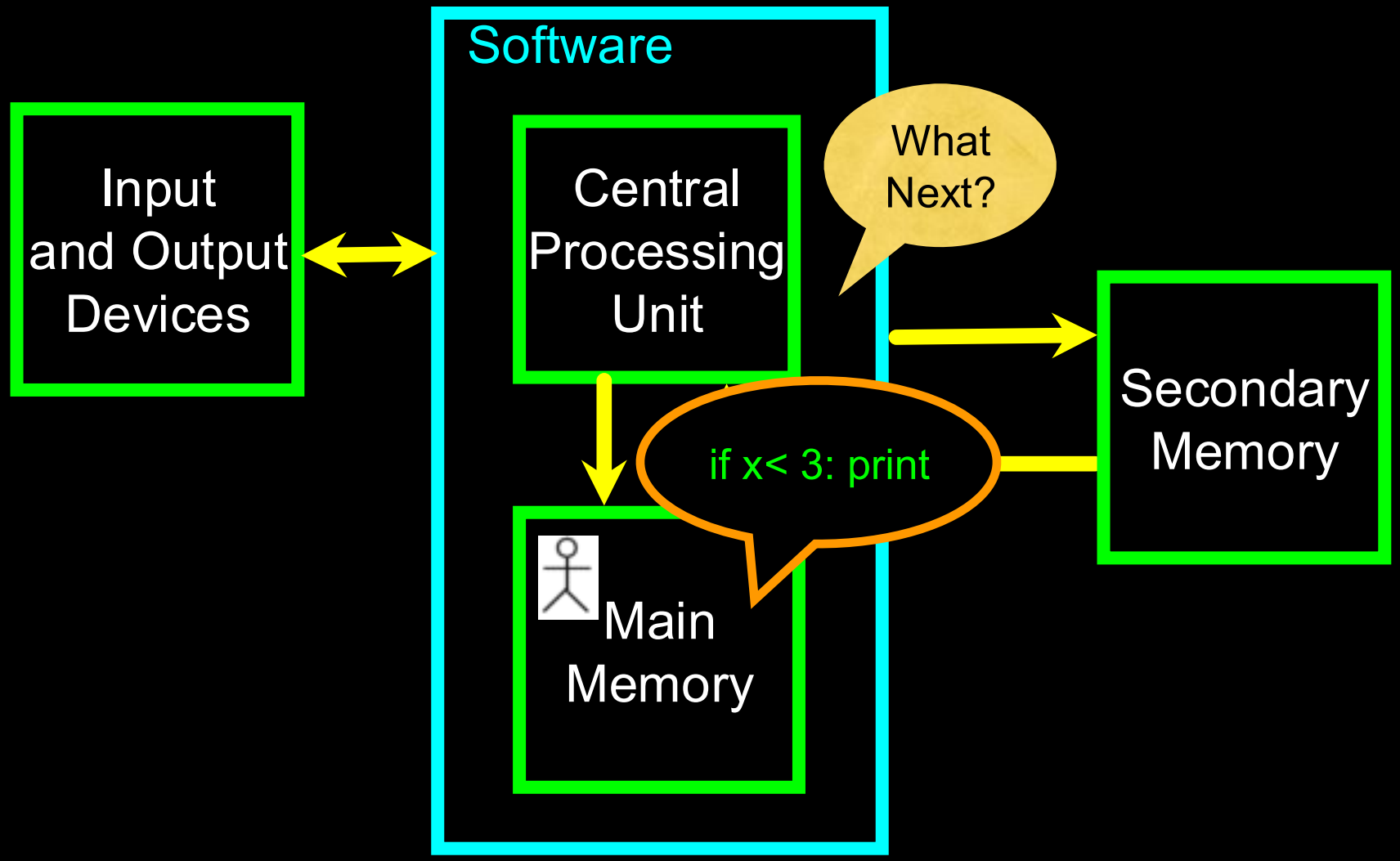

Machine Language

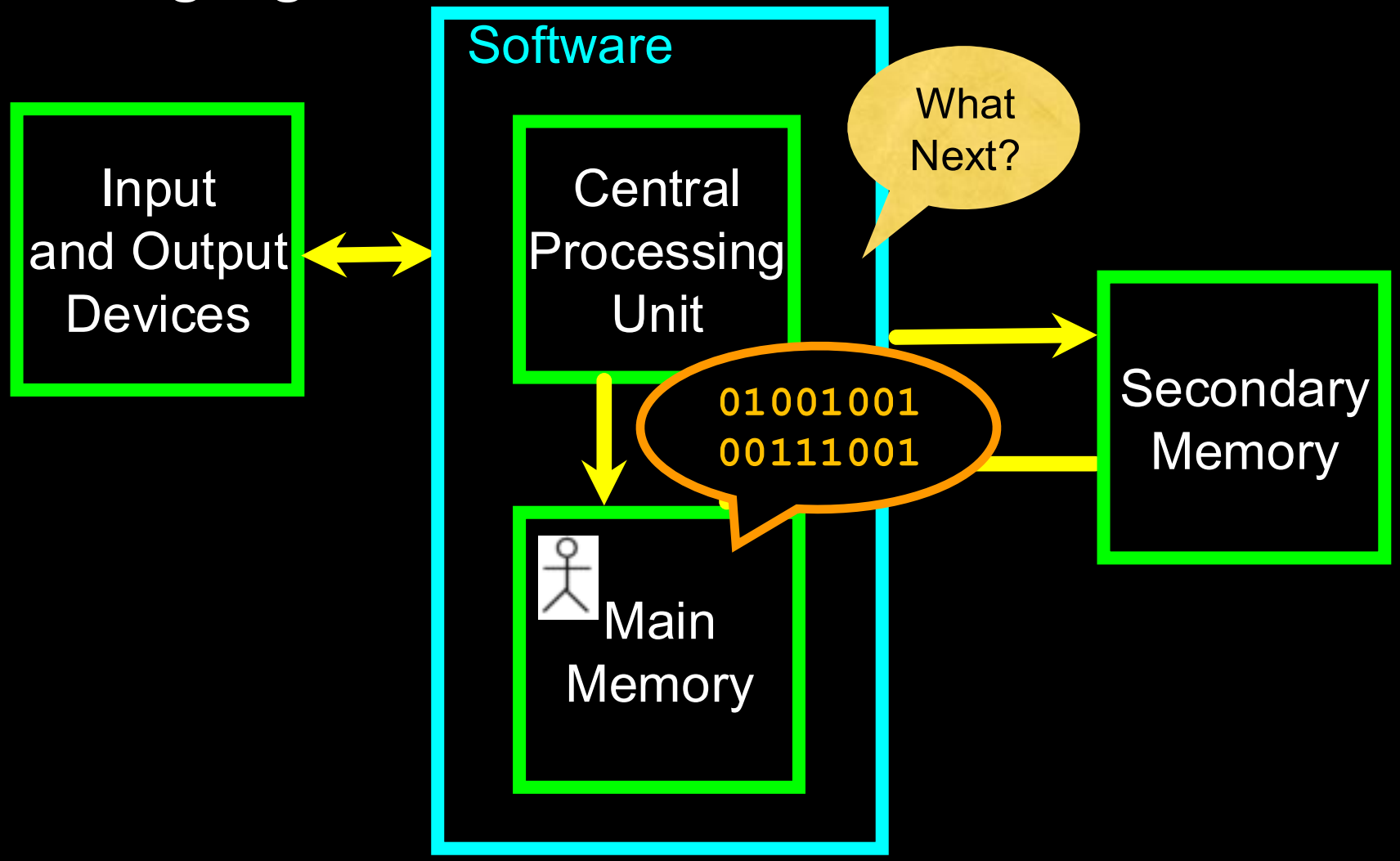

Building Microprocessors

Very Large Scale Integration

- We went from 16 transistors on a board 4 inches on a side to billions of transistors in a chip 0.5 inches on a side

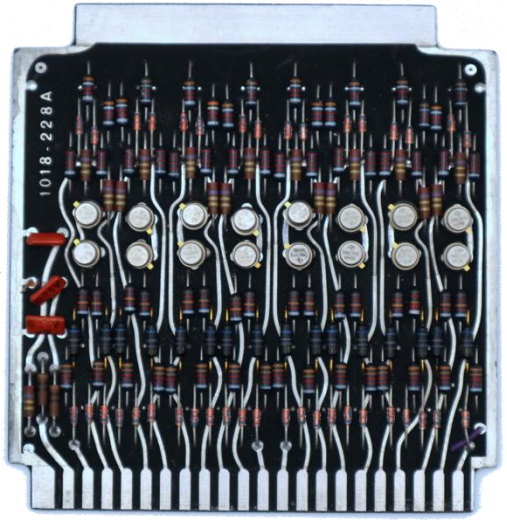

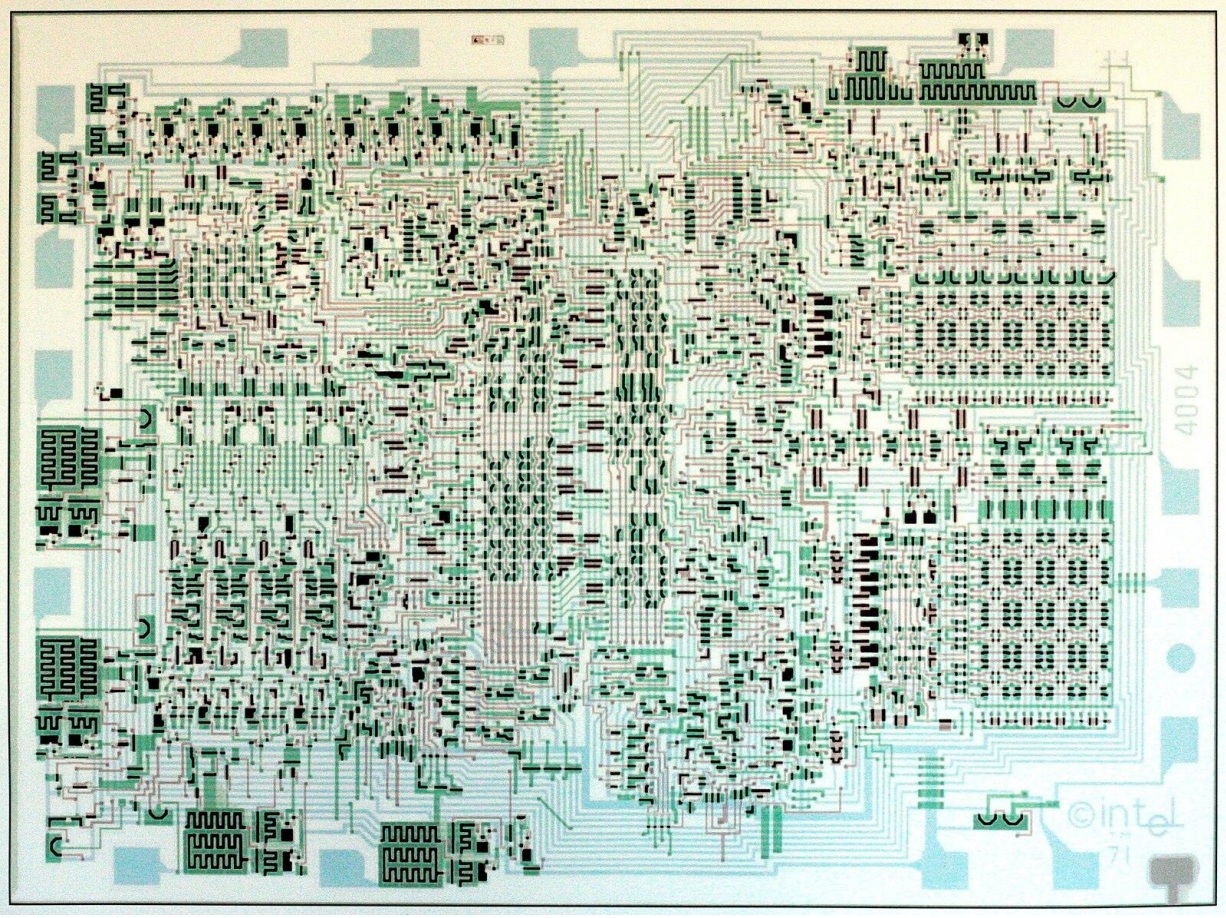

CPU Design Process

- We start with gates and build reusable components and then combine those components to implement programmable digital logic
- Software translates our abstract design into transistors and then creates an optimal layout for our chip
- Photo lithography is then used to build the chip

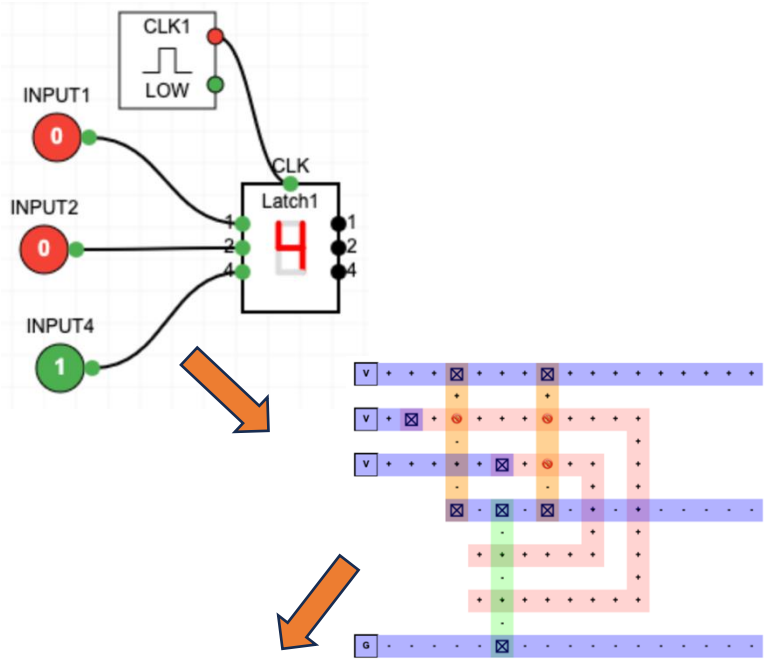

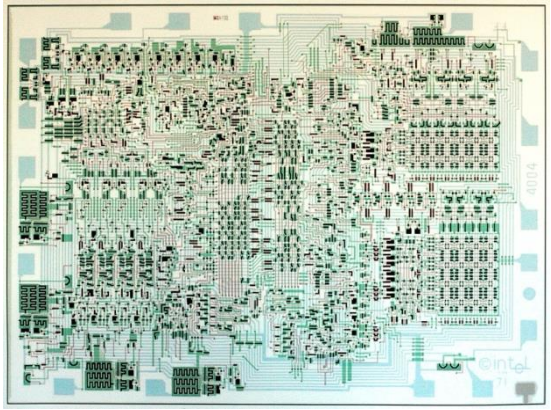

Adding numbers with gates

Gates are now our low-level building blocks – we can combine them to solve problems

Classic Mathematical Logic Gates

Not

A	Q
0	1
1	0

And

A	B	Q
0	0	0
0	1	0
1	0	0
1	1	1

Or

A	B	Q
0	0	0
0	1	1
1	0	1
1	1	1

Exclusive Or

A	B	Q
0	0	0
0	1	1
1	0	1
1	1	0

Representing Numbers with 0's and 1's

- If we are going to do significant computations, we will need a way to represent numbers as electrical values
- "Normal" numbers are Base-10
- We know the place values of Base-10 numbers
- To manipulate numbers with gates, we use Base-2 numbers

Base-10

$$123_{10} = 1 \times 10^2 + 2 \times 10^1 + 3 * 10^0$$

$$= 1 \times 100 + 2 * 10 + 3 * 1 = 123_{10}$$

Base-2

$$110_2 = 1 * 2^2 + 1 * 2^1 + 0*2^0 =$$

$$= 4 + 2 + 0 = 6_{10}$$

Keep it simple for now

- Base–2 to Base-10 for numbers less than 8
- A.k.a. 3-bit numbers

4s 2s 1s

1 1 0 = 6

Base-10	Base-2
0	0
1	1
2	10
3	11
4	100
5	101
6	110
7	111

Nixie Tubes – Binary to Decimal Display

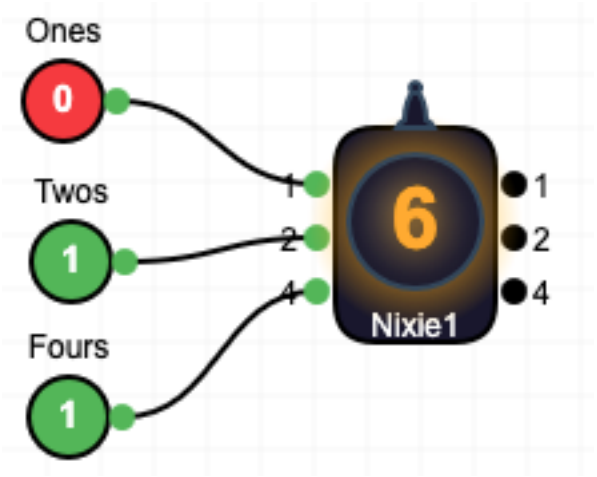

4 2 1

1 1 0 = 6

NIXIE Challenge

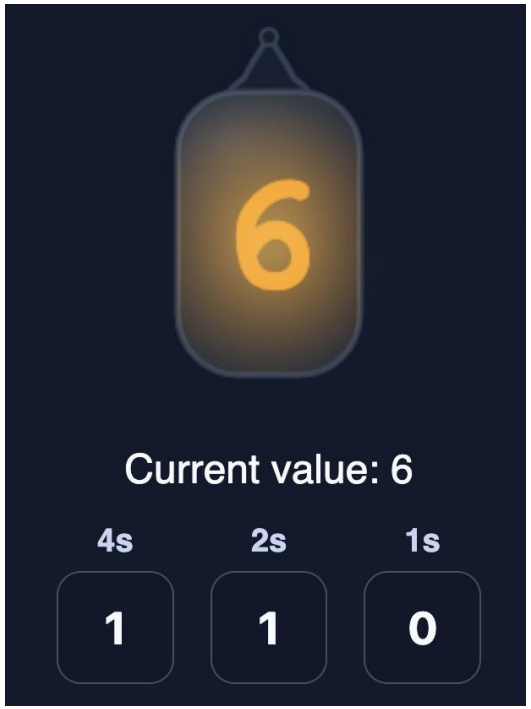

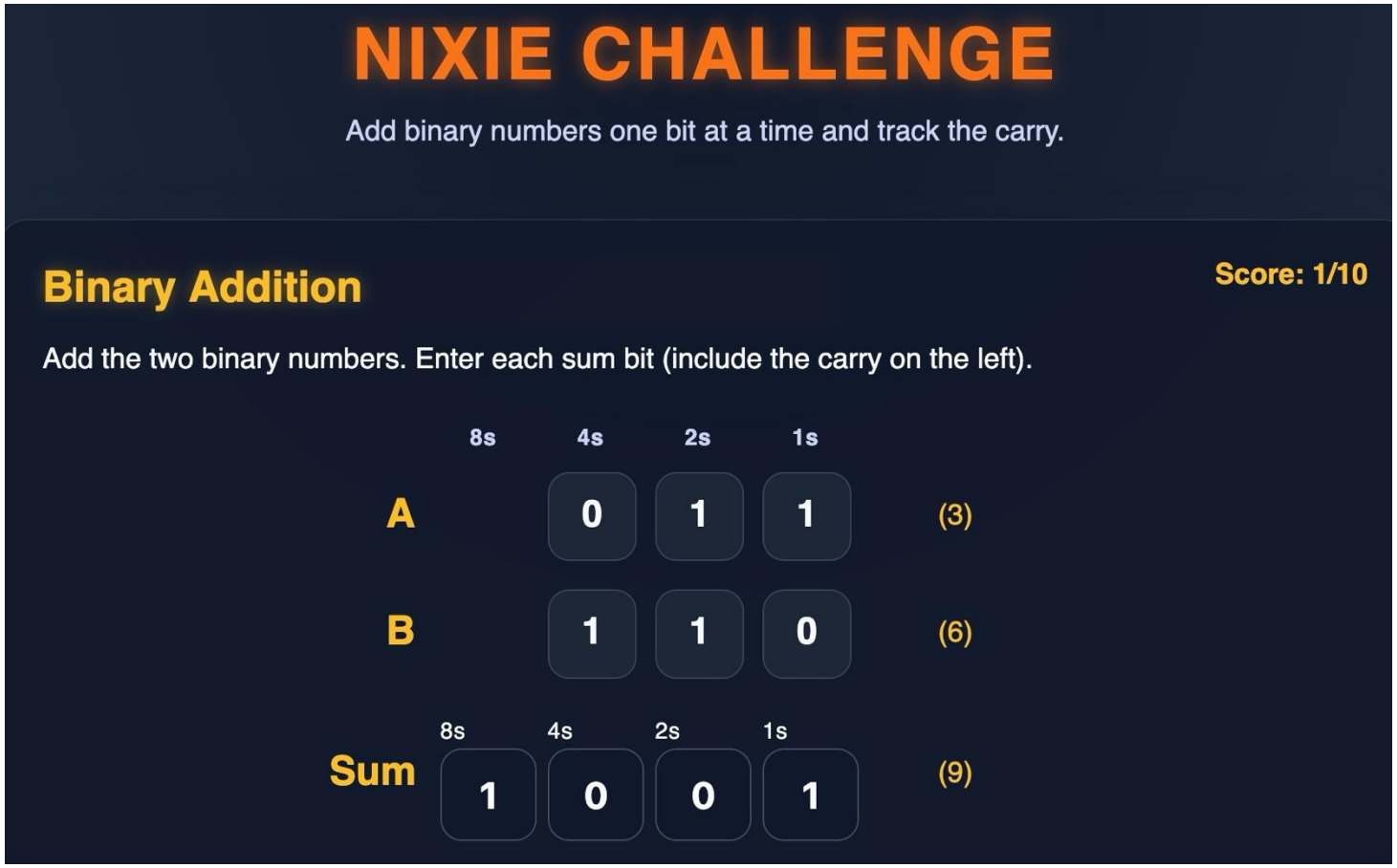

https://www.ca4e.com/tools/nixie/

Base-2 Math

```
      1  (1)
+     1  (1)
-------------
    1 0  (2)
```

```
      1 0  (2)
+     1 0  (2)
-------------
    1 0 0  (4)
```

```
    1 0 0  (4)
+   1 0 0  (4)
-------------
  1 0 0 0  (8)
```

```
    1 1  (3)
+       1  (1)
-------------
  1 0 0  (4)
```

```
      1 1  (3)
+     1 0  (2)
-------------
    1 0 1  (5)
```

```
    1 1 1  (7)
+       1  (1)
-------------
  1 0 0 0  (8)
```

Half Adder

- Compute the sum of two base-2 digits and produce a sum and carry.

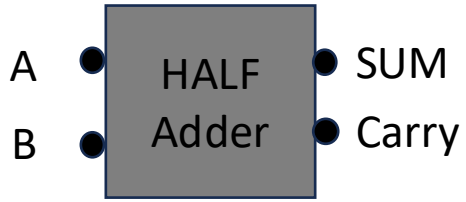

A	B	Sum	Carry
0	0	0	0
0	1	1	0
1	0	1	0
1	1	0	1

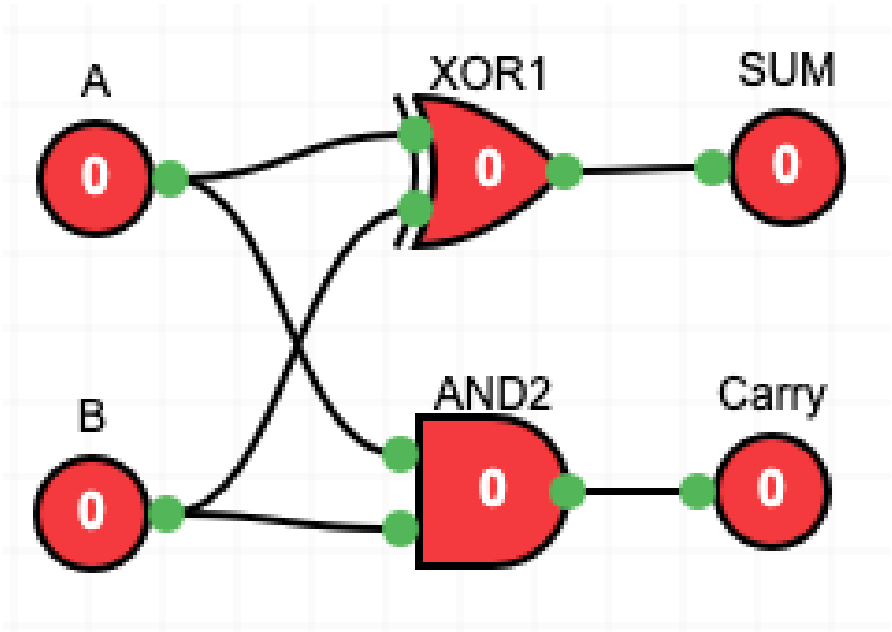

Half Adder – Change Inputs

- Compute the sum of two base-2 digits and produce a sum and carry.

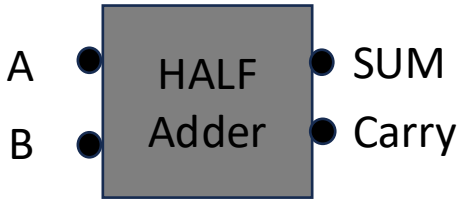

A	B	Sum	Carry
0	0	0	0
0	1	1	0
1	0	1	0
1	1	0	1

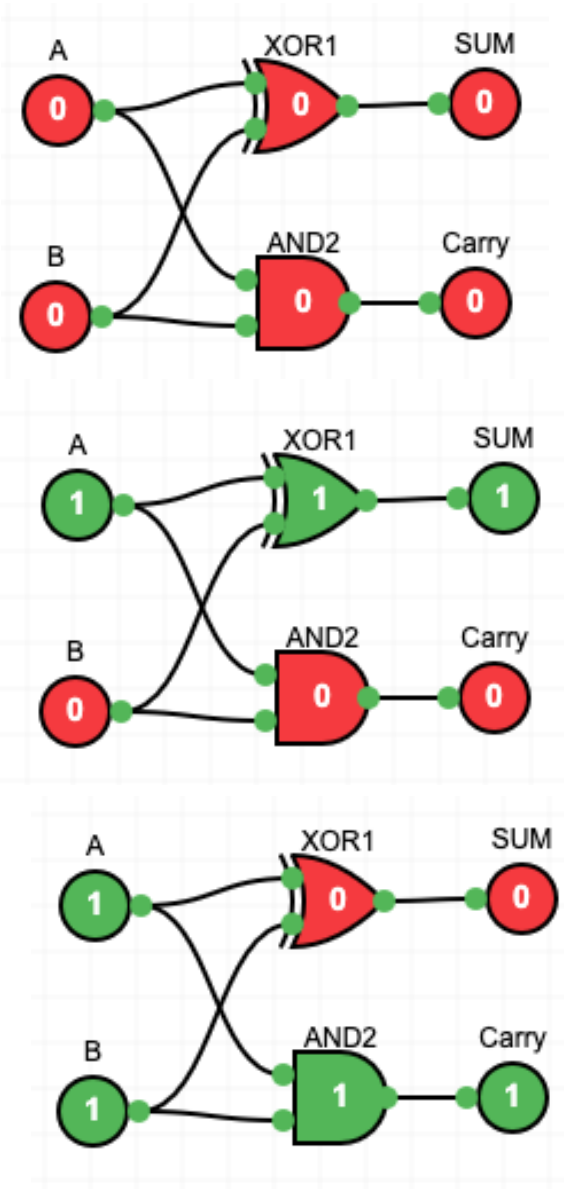

Full Adder

- Adds three 0/1 numbers for a sum/carry between 0 and 3

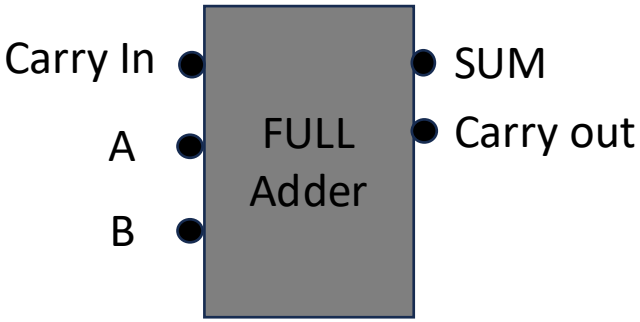


```
        1  (CIN)
        1  (A)
+       1  (B)
      1 1  (3)
```

Carry in	A	B	Sum	Carry Out
0	0	0	0	0
0	0	1	1	0
0	1	0	1	0
0	1	1	0	1
1	0	0	1	0
1	0	1	0	0
1	1	0	0	1
1	1	1	1	1

Full Adder Circuit

- Adds three 0/1 numbers for a sum/carry between 0 and 3

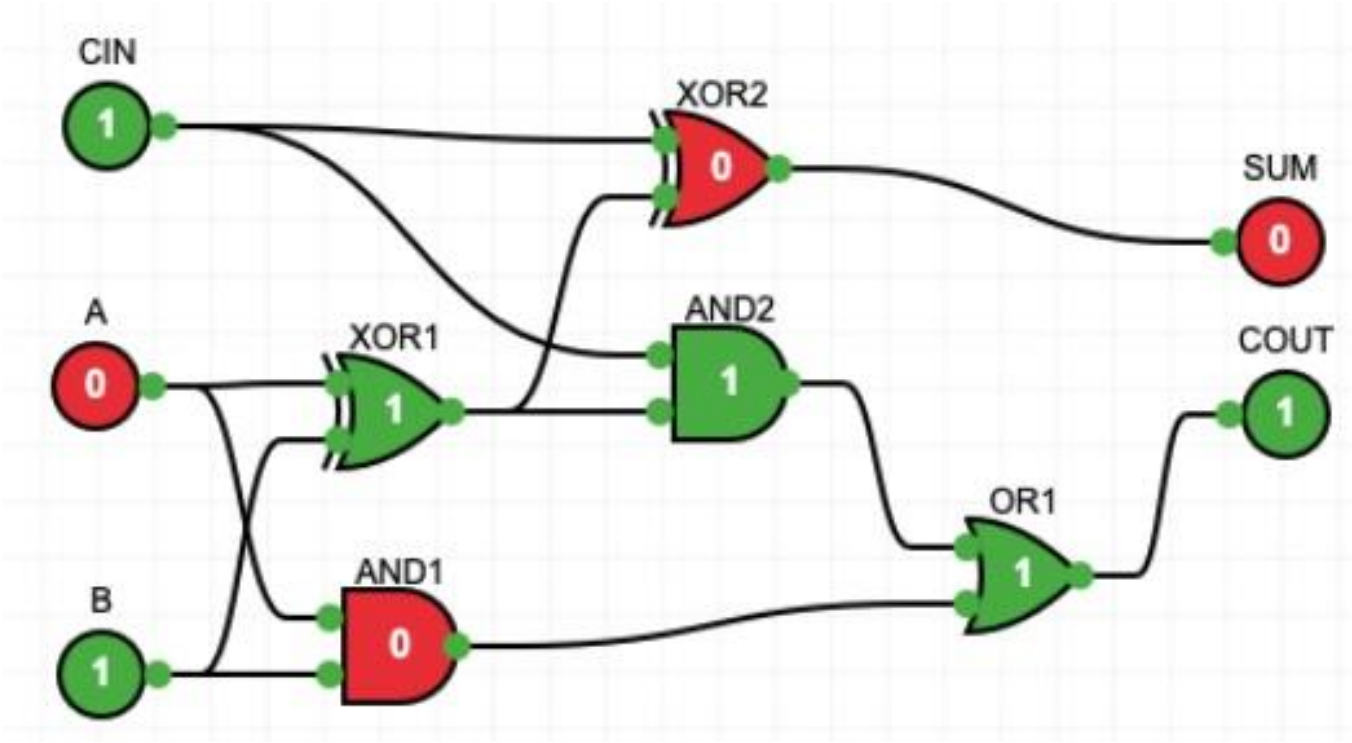


```
      1  (CIN)
      0  (A)
+     1  (B)
  ------------
    1 0  (2)
```

Chaining full adders

```
  0 1 0  (2)
+ 1 0 1  (5)
---------
  1 1 1  (7)
```

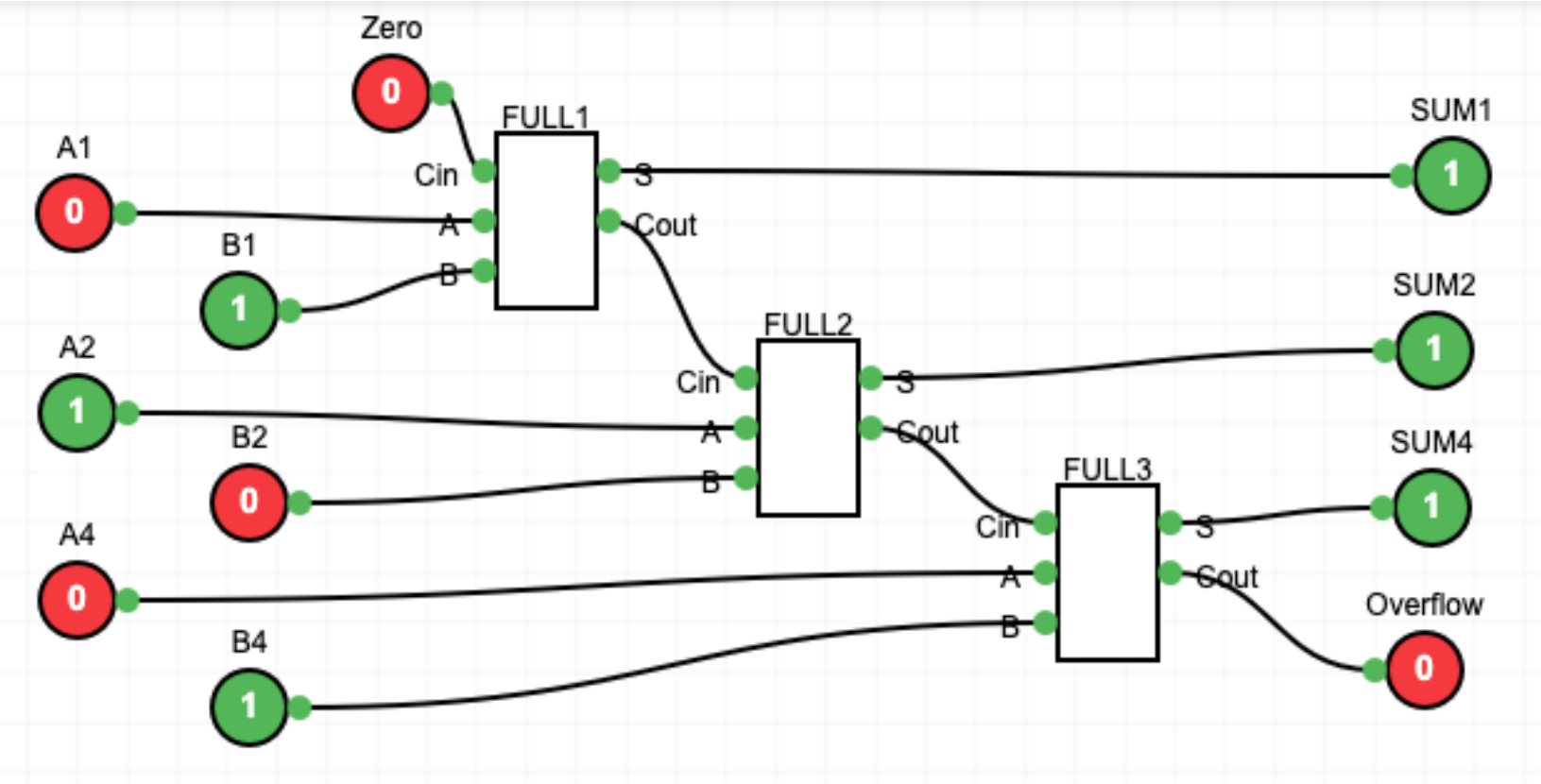

Three Bit Adder Component

- Once we know how to make something, add a component to our design system

$$
\begin{array}{rrrrr}
 & 0 & 1 & 0 & (2) \\
+ & 1 & 0 & 1 & (5) \\
\hline
 & 1 & 1 & 1 & (7)
\end{array}
$$

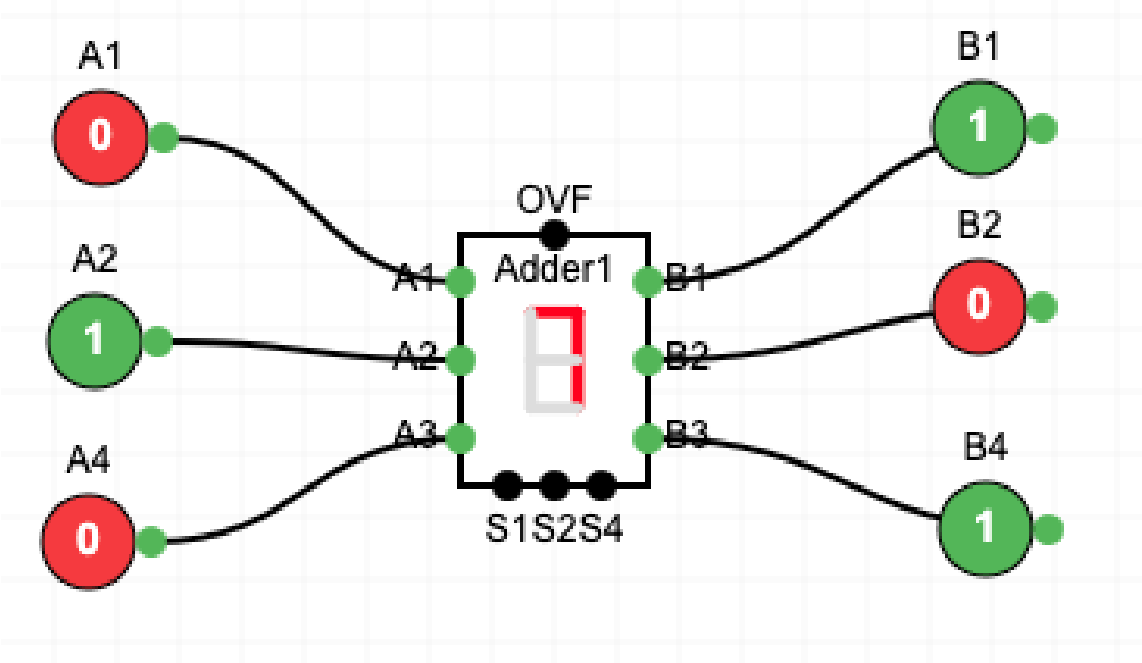

Storing data with gates

Latches and Flip-Flops

Storing Data Using Feedback Loops

- The simplest latch is a "Set-Reset" latch using two NOR gates
- The output of each NOR gate is connected to the one of the inputs of the other NOR gate

A	B	NOR
0	0	1
0	1	0
1	0	0
1	1	0

S	R	Q
0	0	Maintain
0	1	0
1	0	1
1	1	???

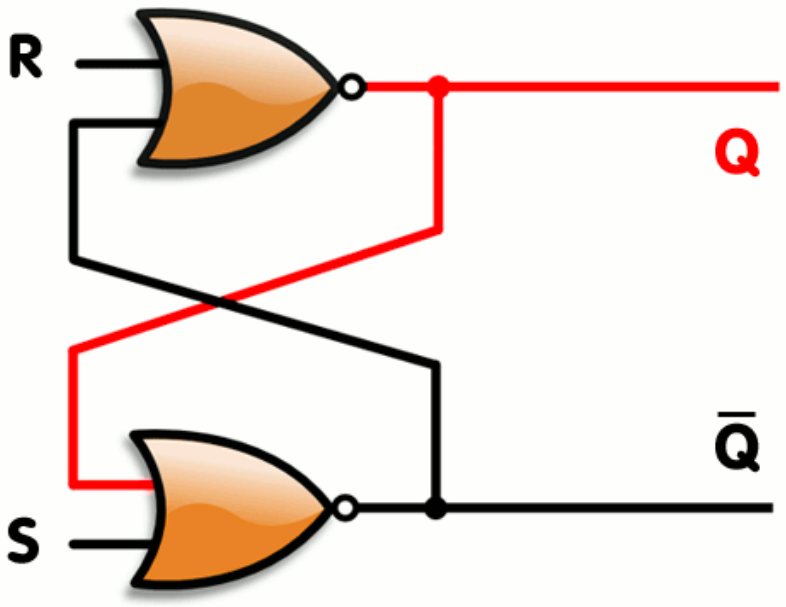

SR Flip-Flop / Latch

- When S and R are zero, the latch maintains its value
- When S=0 and R=1 the internal value becomes 0
- When S=1 and R=0 the internal value becomes 0
- Setting both to 1 means output is undefined

S	R	Q
0	0	Maintain
0	1	0
1	0	1
1	1	???

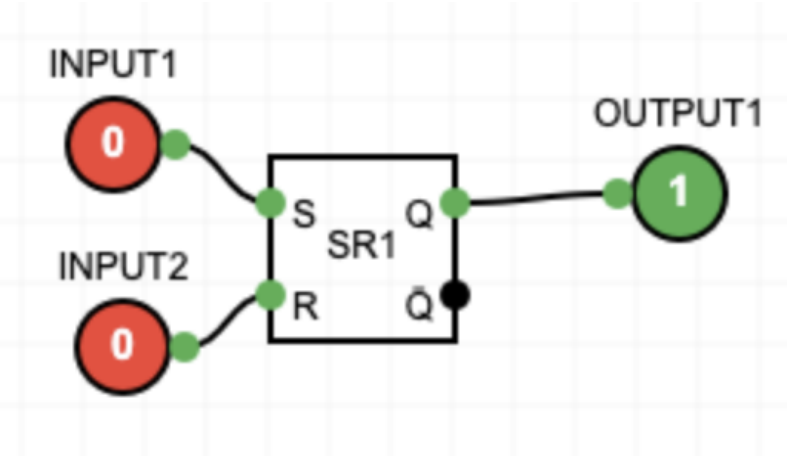

SR Flip-Flop

S	R	Q
0	0	Maintain
0	1	0
1	0	1
1	1	???

Set / Reset

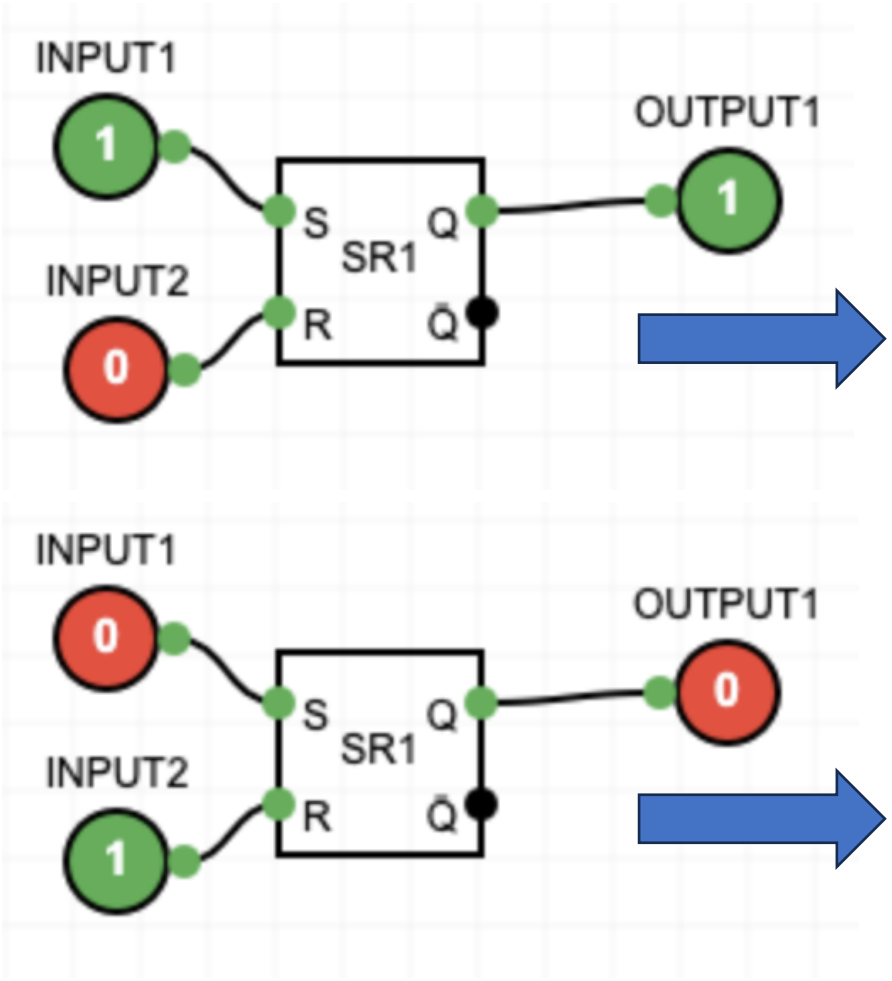

Stored Value

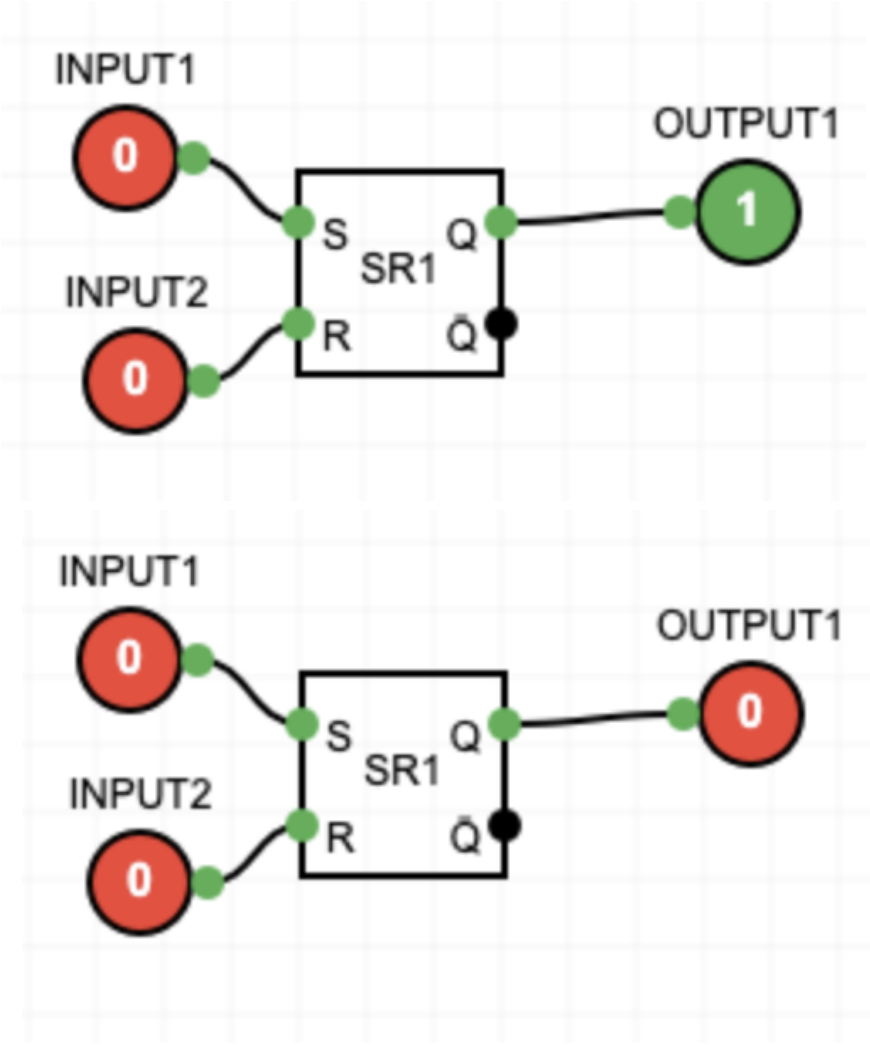

My Simulators Can't Build an SR Latch :(

- My Digital Logic Builder does not handle feedback loops so you can't build a SR latch from two NOR gates (unless I fix it)

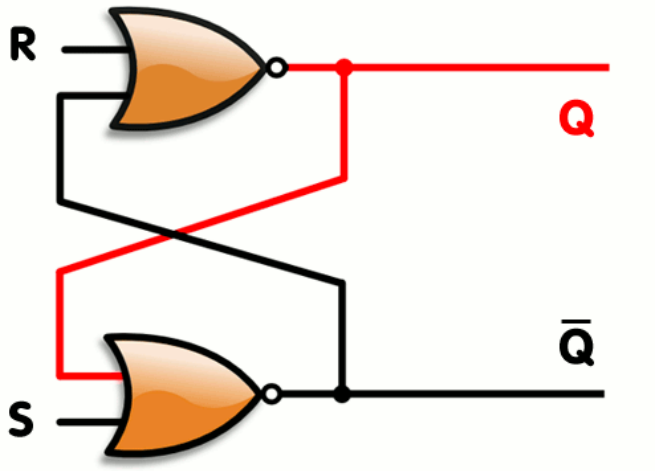

SR Circuit Fails ☹

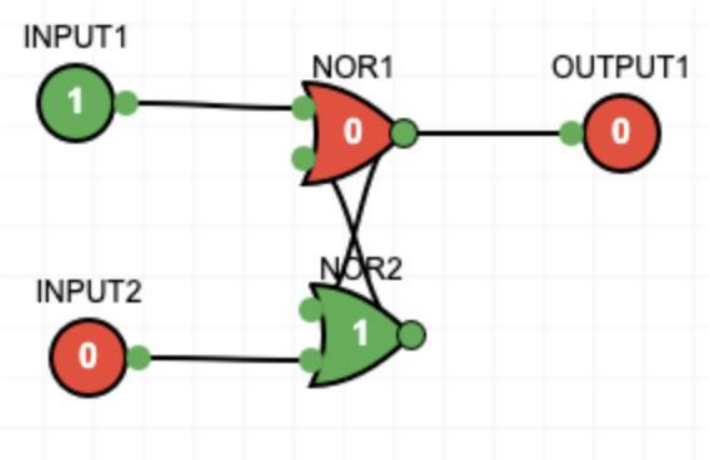

SR Component Works

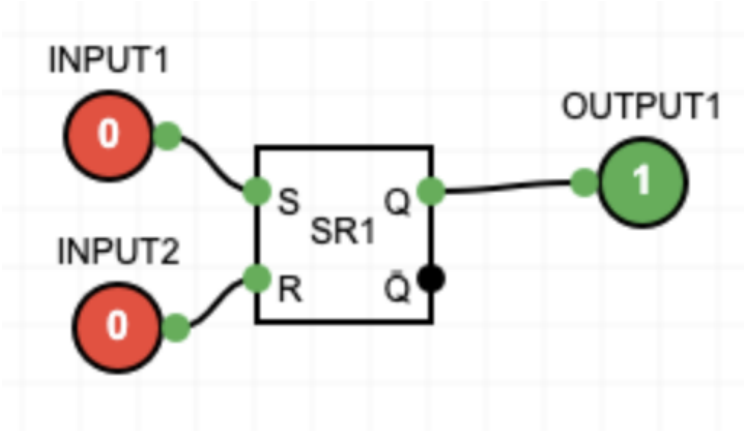

Gated D Latch

- The Gated D Latch has a D (data) and a C (clock) inputs.
- If C is zero, D is ignored, and the output is the most recent stored value
- If C is 1, D is copied into the internal state

C	D	Q
0	0	Maintain
0	1	Maintain
1	0	0
1	1	1

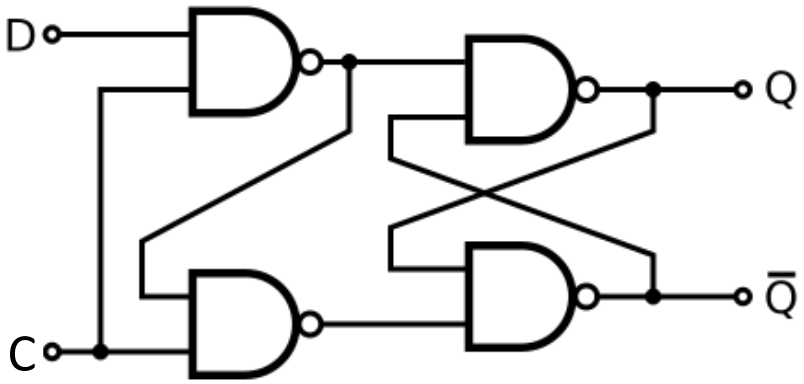

D Latch States

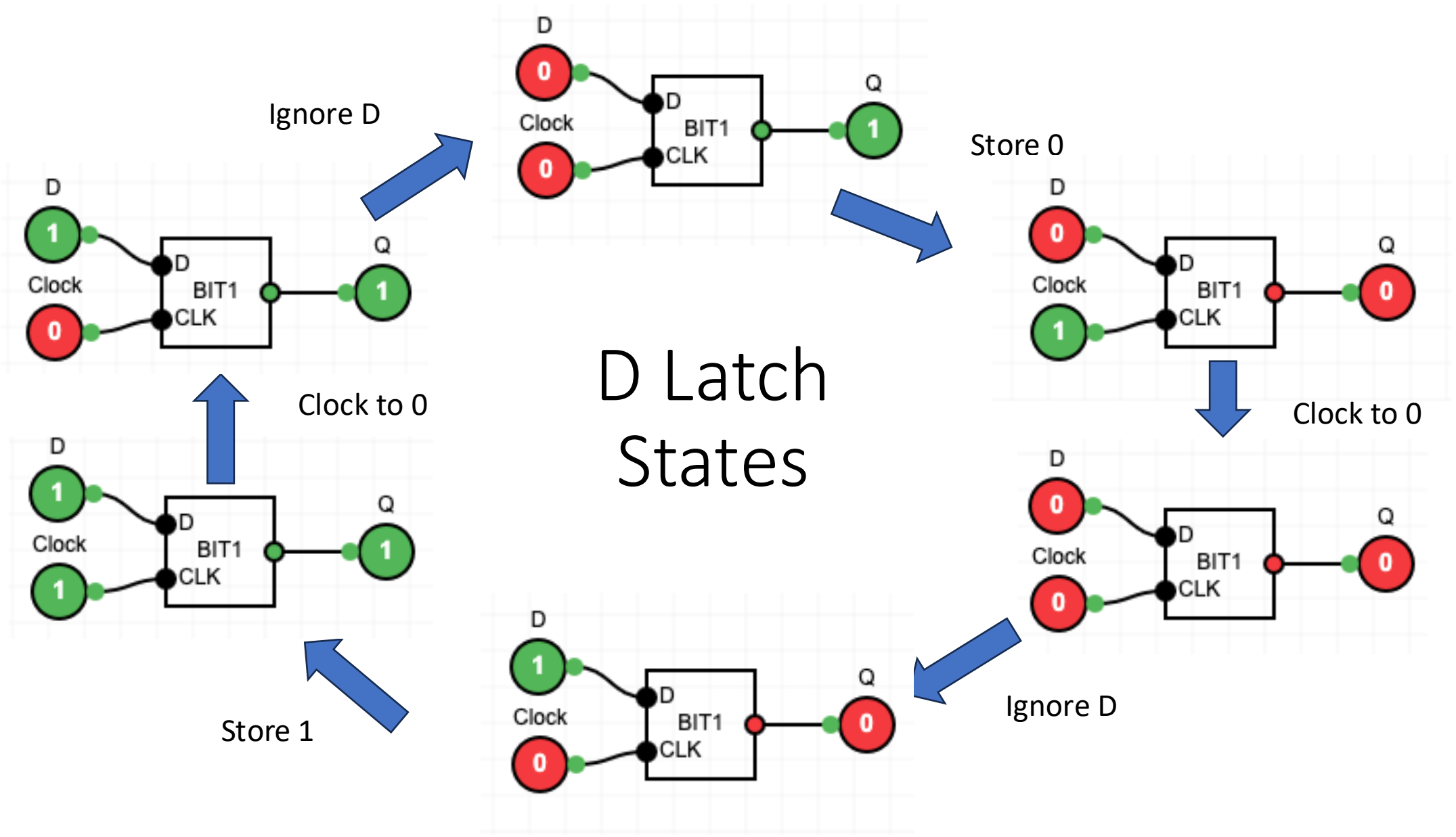

Stack D Latches to Make a 3-bit Register

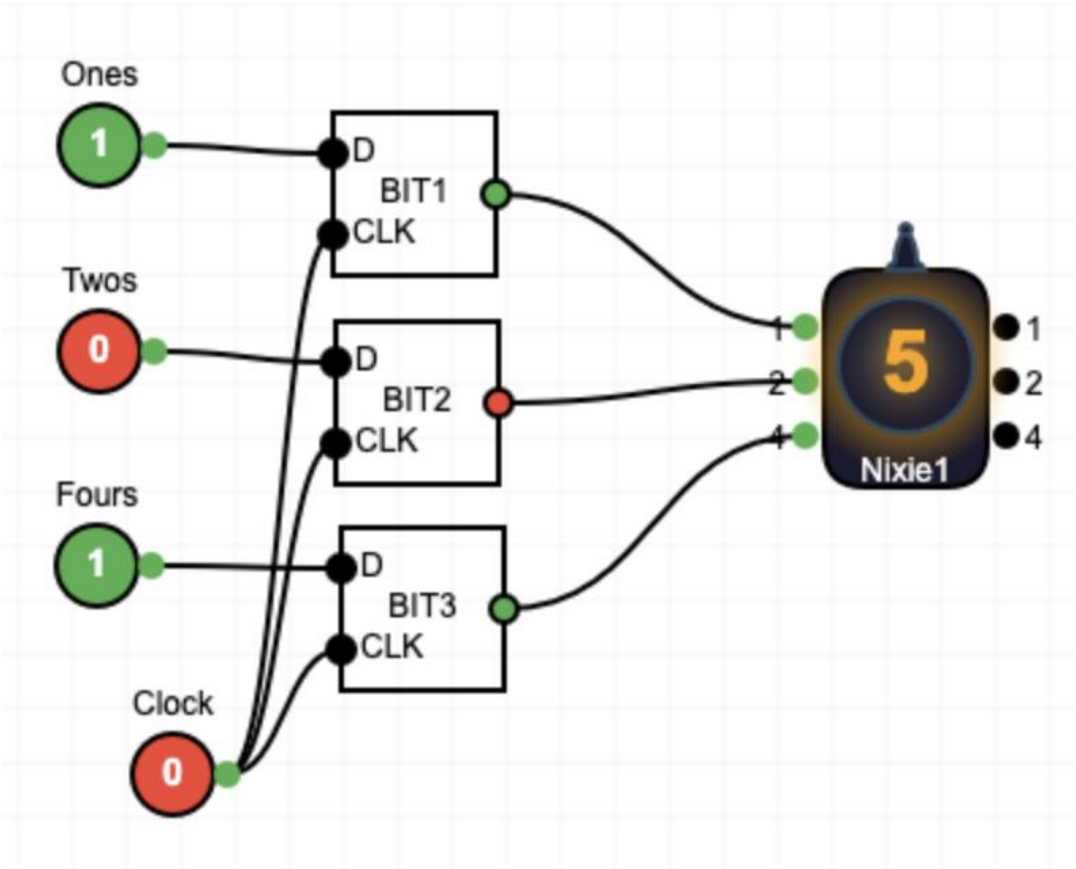

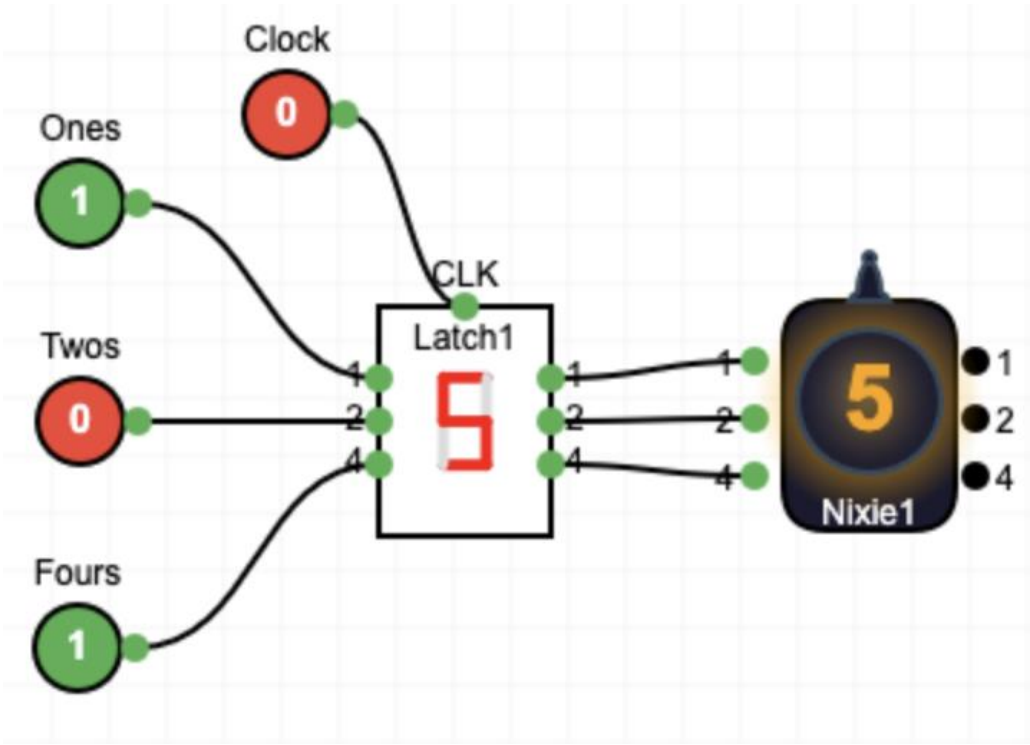

Summary

- In this lecture we started with simple gates like AND and OR
- We built latches / registers for storage

Acknowledgements / Contributions

These slides are Copyright 2025- Charles R. Severance (online.dr-chuck.com) as part of www.ca4e.com and made available under a Creative Commons Attribution 4.0 License. Please maintain this last slide in all copies of the document to comply with the attribution requirements of the license. If you make a change, feel free to add your name and organization to the list of contributors on this page as you republish the materials.

Initial Development: Charles Severance, University of Michigan School of Information

Insert new Contributors and Translators here including names and dates

Continue new Contributors and Translators here