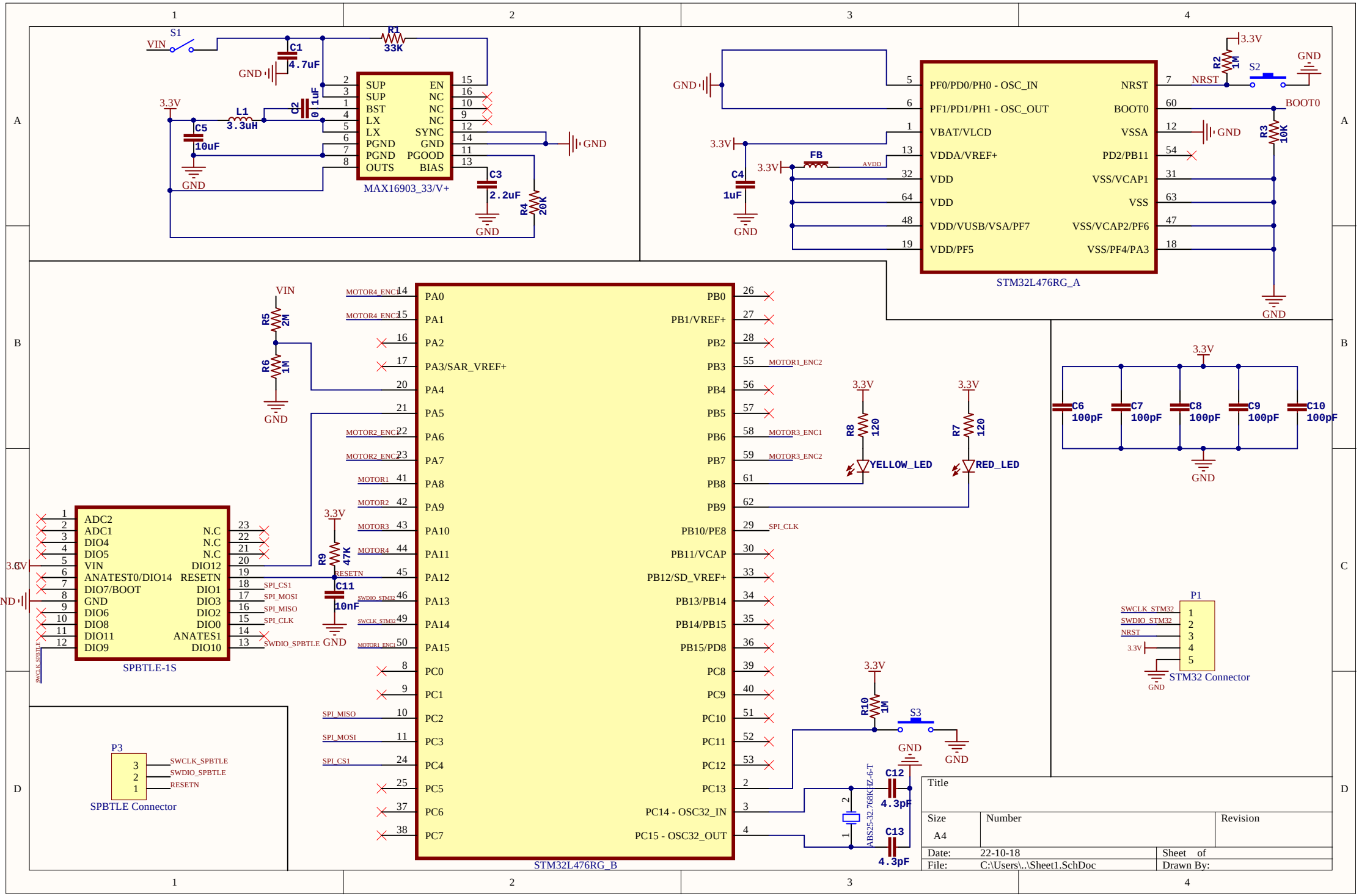
S1
VIN
C1
4.7uF
GND
R1
33K
3.3V
L1
3.3uH
C2
0.1uF
C5
10uF
SUP
SUP
BST
LX
LX
PGND
PGND
OUTS
EN
NC
NC
NC
SYNC
GND
PGOOD
BIAS
MAX16903_33/V+
C3
2.2uF
R4
20K
PF0/PD0/PH0 - OSC_IN
PF1/PD1/PH1 - OSC_OUT
VBAT/VLCD
VDDA/VREF+
VDD
VDD
VDD/VUSB/VSA/PF7
VDD/PF5
NRST
BOOT0
VSSA
PD2/PB11
VSS/VCAP1
VSS
VSS/VCAP2/PF6
VSS/PF4/PA3
R2
1M
S2
R3
10K
FB
AVDD
C4
1uF
STM32L476RG_A
R5
2M
R6
1M
PA0
PA1
PA2
PA3/SAR_VREF+
PA4
PA5
PA6
PA7
PA8
PA9
PA10
PA11
PA12
PA13
PA14
PA15
PC0
PC1
PC2
PC3
PC4
PC5
PC6
PC7
PB0
PB1/VREF+
PB2
PB3
PB4
PB5
PB6
PB7
PB8
PB9
PB10/PE8
PB11/VCAP
PB12/SD_VREF+
PB13/PB14
PB14/PB15
PB15/PD8
PC8
PC9
PC10
PC11
PC12
PC13
PC14 - OSC32_IN
PC15 - OSC32_OUT
MOTOR4_ENC1
MOTOR4_ENC2
MOTOR2_ENC1
MOTOR2_ENC2
MOTOR1
MOTOR2
MOTOR3
MOTOR4
MOTOR1_ENC1
MOTOR1_ENC2
MOTOR3_ENC1
MOTOR3_ENC2
SPI_CLK
SPI_MISO
SPI_MOSI
SPI_CS1
R8
120
YELLOW_LED
R7
120
RED_LED
C6
100pF
C7
100pF
C8
100pF
C9
100pF
C10
100pF
ADC2
ADC1
DIO4
DIO5
VIN
ANATEST0/DIO14
DIO7/BOOT
GND
DIO6
DIO8
DIO11
DIO9
N.C
N.C
N.C
DIO12
RESETN
DIO1
DIO3
DIO2
DIO0
ANATES1
DIO10
SPI_CS1
SPI_MOSI
SPI_MISO
SPI_CLK
SWDIO_SPBTLE
SWCLK_SPBTLE
SPBTLE-1S
R9
47K
RESETN
C11
10nF
SWDIO_STM32
SWCLK_STM32
P1
SWCLK_STM32
SWDIO_STM32
NRST
STM32 Connector
P3
SWCLK_SPBTLE
SWDIO_SPBTLE
RESETN
SPBTLE Connector
R10
1M
S3
C12
4.3pF
C13
4.3pF
ABS25-32.768KHZ-6-T
STM32L476RG_B
Title
Size
A4
Number
Revision
Date: 22-10-18
File: C:\Users\..\Sheet1.SchDoc
Sheet of
Drawn By:

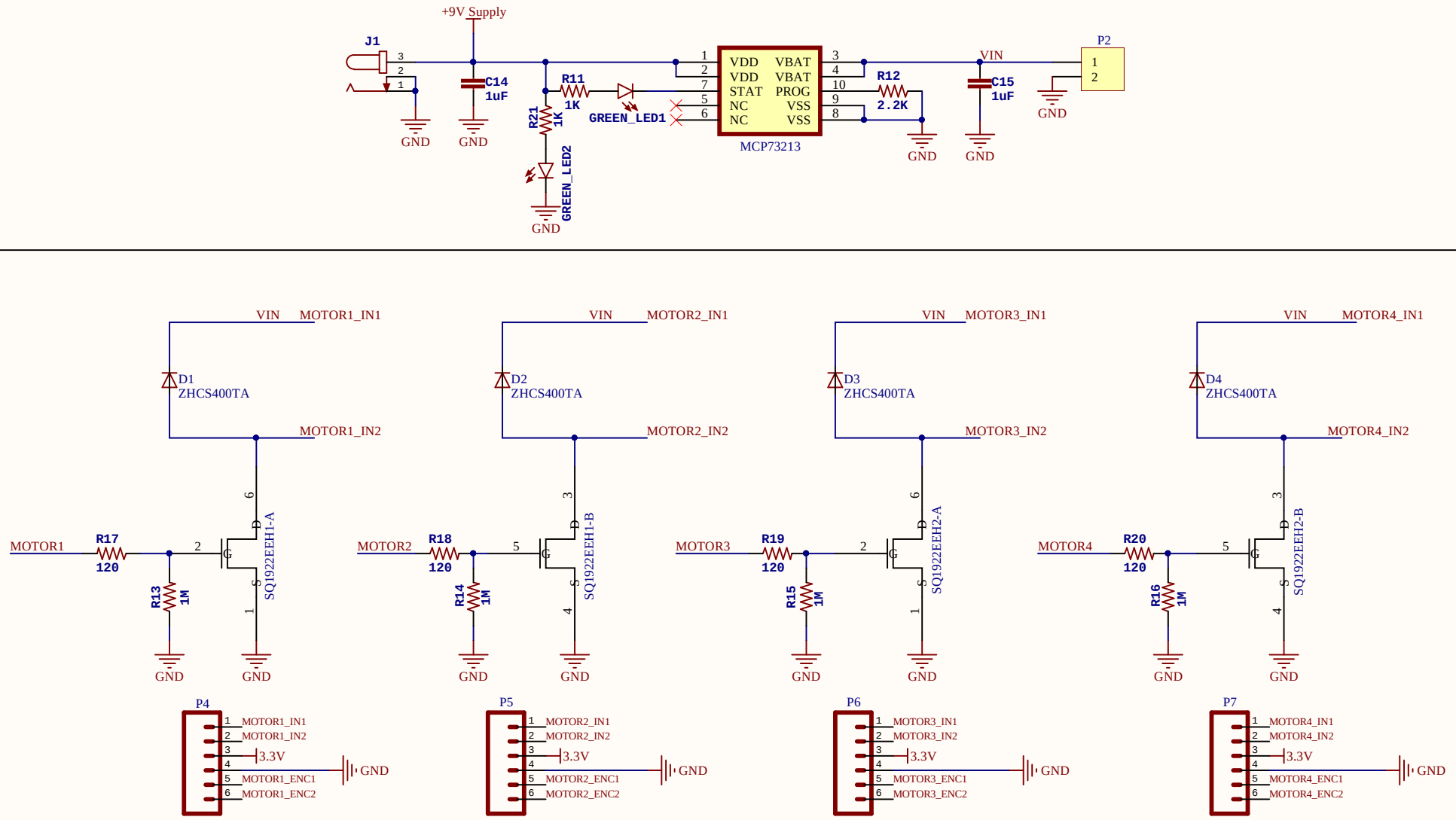

Title		
Size A4	Number	Revision
Date: 22-10-18		Sheet of
File: C:\Users\..\Sheet2.SchDoc		Drawn By: