Class 14: RNA-Seq Mini-Project

Cyrus Shabahang (PID:19145663)

Table of contents

Background . . . 1
Data Import . . . 1
  Clean up (data tidying) . . . 2
DESeq Analysis . . . 3
  Setting up the required DESeq object . . . 3
  Running DESeq . . . 3
  Getting results . . . 4
Volcano Plot . . . 5
Add Annotation . . . 6
Pathway Analysis . . . 8
  KEGG . . . 11
  Reactome . . . 19

Background

The data for today's mini-project comes from a knock-down study of an important HOX gene.

Data Import

```
library(DESeq2)
```

```
colData <- "GSE37704_metadata.csv"
countData <- "GSE37704_featurecounts.csv"
colData = read.csv(colData, row.names = 1)
countData = read.csv(countData, row.names = 1)
```

```r
head(colData)
```

```
              condition
SRR493366 control_sirna
SRR493367 control_sirna
SRR493368 control_sirna
SRR493369      hoxa1_kd
SRR493370      hoxa1_kd
SRR493371      hoxa1_kd
```

```r
head(countData)
```

```
                length SRR493366 SRR493367 SRR493368 SRR493369 SRR493370
ENSG00000186092    918         0         0         0         0         0
ENSG00000279928    718         0         0         0         0         0
ENSG00000279457   1982        23        28        29        29        28
ENSG00000278566    939         0         0         0         0         0
ENSG00000273547    939         0         0         0         0         0
ENSG00000187634   3214       124       123       205       207       212
                SRR493371
ENSG00000186092         0
ENSG00000279928         0
ENSG00000279457        46
ENSG00000278566         0
ENSG00000273547         0
ENSG00000187634       258
```

Clean up (data tidying)

We need to remove that odd first column in countData namely countData$length.

```r
countData$length <- NULL
head(countData)
```

```
                SRR493366 SRR493367 SRR493368 SRR493369 SRR493370 SRR493371
ENSG00000186092         0         0         0         0         0         0
ENSG00000279928         0         0         0         0         0         0
ENSG00000279457        23        28        29        29        28        46
ENSG00000278566         0         0         0         0         0         0
ENSG00000273547         0         0         0         0         0         0
ENSG00000187634       124       123       205       207       212       258
```

This looks better but there are lots of zero entries in there so let's get rid of them as we have no data for these.

```
countData <- countData[rowSums(countData) > 0, ]
```

DESeq Analysis

Setting up the required DESeq object

```
countData <- as.matrix(countData)

all(colnames(countData) == rownames(colData))
```

```
[1] TRUE
```

```
colData <- colData[colnames(countData), , drop = FALSE]
all(colnames(countData) == rownames(colData))
```

```
[1] TRUE
```

Running DESeq

```
dds <- DESeqDataSetFromMatrix(
  countData = countData,
  colData = colData,
  design = ~ condition
)
```

```
Warning in DESeqDataSet(se, design = design, ignoreRank): some variables in
design formula are characters, converting to factors
```

```
dds$condition <- relevel(dds$condition, "control_sirna")

dds <- DESeq(dds)
```

```
estimating size factors
```

```
estimating dispersions

gene-wise dispersion estimates

mean-dispersion relationship

final dispersion estimates

fitting model and testing
```

Getting results

```r
res <- results(dds)
summary(res)
```

```
out of 15975 with nonzero total read count
adjusted p-value < 0.1
LFC > 0 (up)       : 4349, 27%
LFC < 0 (down)     : 4396, 28%
outliers [1]       : 0, 0%
low counts [2]     : 1237, 7.7%
(mean count < 0)
[1] see 'cooksCutoff' argument of ?results
[2] see 'independentFiltering' argument of ?results
```

```r
res[order(res$padj), ][1:10, ]
```

```
log2 fold change (MLE): condition hoxa1 kd vs control sirna
Wald test p-value: condition hoxa1 kd vs control sirna
DataFrame with 10 rows and 6 columns
                 baseMean log2FoldChange     lfcSE      stat    pvalue
                <numeric>      <numeric> <numeric> <numeric> <numeric>
ENSG00000117519   4483.63       -2.42272 0.0600016  -40.3776         0
ENSG00000183508   2053.88        3.20196 0.0724172   44.2154         0
ENSG00000159176   5692.46       -2.31374 0.0575534  -40.2016         0
ENSG00000116016   4423.95       -1.88802 0.0431680  -43.7366         0
ENSG00000164251   2348.77        3.34451 0.0690718   48.4208         0
```

```
ENSG00000124766   2576.65        2.39229 0.0617086   38.7675         0
ENSG00000124762  28106.12        1.83226 0.0388966   47.1058         0
ENSG00000106366  43719.13       -1.84405 0.0419165  -43.9933         0
ENSG00000188153   2944.13        2.26608 0.0552681   41.0016         0
ENSG00000122861  28007.14        2.26253 0.0552183   40.9742         0
                     padj
                <numeric>
ENSG00000117519         0
ENSG00000183508         0
ENSG00000159176         0
ENSG00000116016         0
ENSG00000164251         0
ENSG00000124766         0
ENSG00000124762         0
ENSG00000106366         0
ENSG00000188153         0
ENSG00000122861         0
```

Volcano Plot

```r
library(ggplot2)

res_df <- as.data.frame(res)
res_df$padj[is.na(res_df$padj)] <- 1
res_df$padj_plot <- pmax(res_df$padj, 1e-300)

mycols <- rep("gray", nrow(res_df))
mycols[abs(res_df$log2FoldChange) > 2] <- "blue"
mycols[res_df$padj > 0.01] <- "gray"

ggplot(res_df) +
  aes(x = log2FoldChange, y = -log10(padj_plot)) +
  geom_point(col = mycols) +
  xlab("Log2(FoldChange)") +
  ylab("-Log10(Adj P-value)") +
  geom_vline(xintercept = c(-2, 2)) +
  geom_hline(yintercept = -log10(0.01))
```

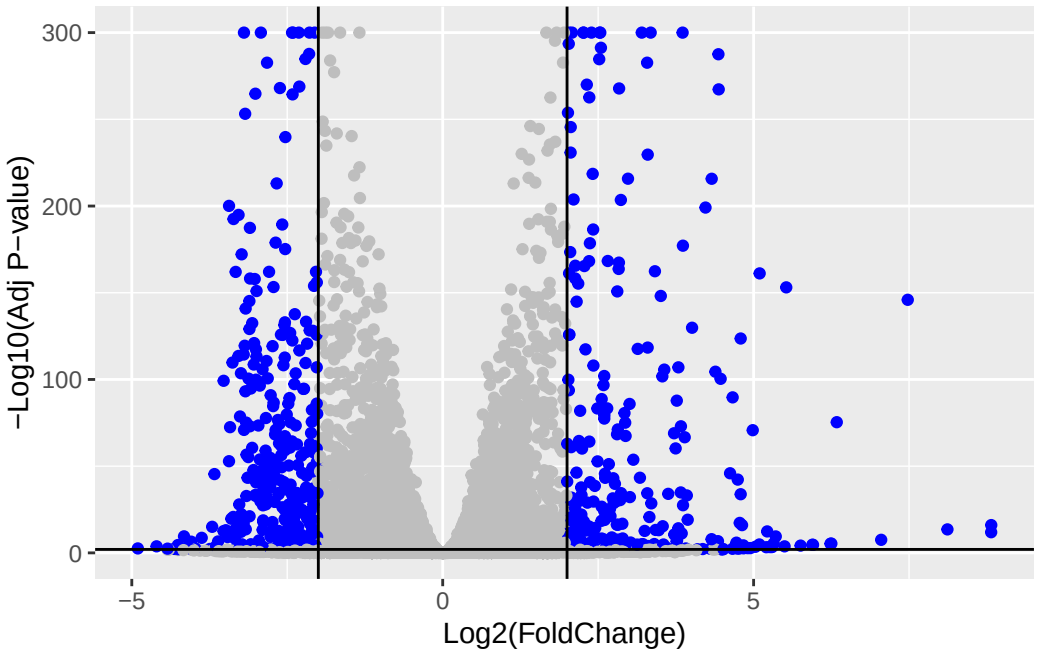

Add Annotation

```
library("AnnotationDbi")
library("org.Hs.eg.db")
```

```
columns(org.Hs.eg.db)
```

```
 [1] "ACCNUM"       "ALIAS"        "ENSEMBL"      "ENSEMBLPROT"  "ENSEMBLTRANS"
 [6] "ENTREZID"     "ENZYME"       "EVIDENCE"     "EVIDENCEALL"  "GENENAME"
[11] "GENETYPE"     "GO"           "GOALL"        "IPI"          "MAP"
[16] "OMIM"         "ONTOLOGY"     "ONTOLOGYALL"  "PATH"         "PFAM"
[21] "PMID"         "PROSITE"      "REFSEQ"       "SYMBOL"       "UCSCKG"
[26] "UNIPROT"
```

```
res$symbol = mapIds(org.Hs.eg.db,
                    keys = rownames(res),
                    keytype = "ENSEMBL",
```

```
                    column = "SYMBOL",
                    multiVals = "first")
```

```
'select()' returned 1:many mapping between keys and columns
```

```
res$entrez = mapIds(org.Hs.eg.db,
                  keys = row.names(res),
                  keytype = "ENSEMBL",
                  column = "ENTREZID",
                  multiVals = "first")
```

```
'select()' returned 1:many mapping between keys and columns
```

```
res$name = mapIds(org.Hs.eg.db,
                  keys = row.names(res),
                  keytype = "ENSEMBL",
                  column = "GENENAME",
                  multiVals = "first")
```

```
'select()' returned 1:many mapping between keys and columns
```

```
head(res, 10)
```

```
log2 fold change (MLE): condition hoxa1 kd vs control sirna
Wald test p-value: condition hoxa1 kd vs control sirna
DataFrame with 10 rows and 9 columns
                   baseMean log2FoldChange     lfcSE       stat      pvalue
                  <numeric>      <numeric> <numeric>  <numeric>   <numeric>
ENSG00000279457   29.913579      0.1792571 0.3248216   0.551863 5.81042e-01
ENSG00000187634  183.229650      0.4264571 0.1402658   3.040350 2.36304e-03
ENSG00000188976 1651.188076     -0.6927205 0.0548465 -12.630158 1.43990e-36
ENSG00000187961  209.637938      0.7297556 0.1318599   5.534326 3.12428e-08
ENSG00000187583   47.255123      0.0405765 0.2718928   0.149237 8.81366e-01
ENSG00000187642   11.979750      0.5428105 0.5215598   1.040744 2.97994e-01
ENSG00000188290  108.922128      2.0570638 0.1969053  10.446970 1.51282e-25
ENSG00000187608  350.716868      0.2573837 0.1027266   2.505522 1.22271e-02
ENSG00000188157 9128.439422      0.3899088 0.0467163   8.346304 7.04321e-17
ENSG00000237330    0.158192      0.7859552 4.0804729   0.192614 8.47261e-01
                       padj      symbol      entrez                   name
```

```
                  <numeric> <character> <character>            <character>
ENSG00000279457 6.86555e-01          NA          NA                     NA
ENSG00000187634 5.15718e-03      SAMD11      148398 sterile alpha motif ..
ENSG00000188976 1.76549e-35       NOC2L       26155 NOC2 like nucleolar ..
ENSG00000187961 1.13413e-07      KLHL17      339451 kelch like family me..
ENSG00000187583 9.19031e-01     PLEKHN1       84069 pleckstrin homology ..
ENSG00000187642 4.03379e-01       PERM1       84808 PPARGC1 and ESRR ind..
ENSG00000188290 1.30538e-24        HES4       57801 hes family bHLH tran..
ENSG00000187608 2.37452e-02       ISG15        9636 ISG15 ubiquitin like..
ENSG00000188157 4.21963e-16        AGRN      375790                   agrin
ENSG00000237330          NA      RNF223      401934 ring finger protein ..
```

Let's reorder these results by adjusted p-value and save them to a CSV file in our current project directory.

```
res <- res[!is.na(res$padj), ]
res <- res[order(res$padj), ]
write.csv(as.data.frame(res), file = "deseq_results.csv")
```

Pathway Analysis

Let's load the packages and setup the KEGG data-sets we need:

```
library(pathview)
```

```
##############################################################################
Pathview is an open source software package distributed under GNU General
Public License version 3 (GPLv3). Details of GPLv3 is available at
http://www.gnu.org/licenses/gpl-3.0.html. Particullary, users are required to
formally cite the original Pathview paper (not just mention it) in publications
or products. For details, do citation("pathview") within R.

The pathview downloads and uses KEGG data. Non-academic uses may require a KEGG
license agreement (details at http://www.kegg.jp/kegg/legal.html).
##############################################################################
```

```
library(gage)
```

```r
library(gageData)

data(kegg.sets.hs)
data(sigmet.idx.hs)

kegg.sets.hs = kegg.sets.hs[sigmet.idx.hs]

head(kegg.sets.hs, 3)
```

```
$`hsa00232 Caffeine metabolism`
[1] "10"   "1544" "1548" "1549" "1553" "7498" "9"

$`hsa00983 Drug metabolism - other enzymes`
 [1] "10"     "1066"   "10720"  "10941"  "151531" "1548"   "1549"   "1551"
 [9] "1553"   "1576"   "1577"   "1806"   "1807"   "1890"   "221223" "2990"
[17] "3251"   "3614"   "3615"   "3704"   "51733"  "54490"  "54575"  "54576"
[25] "54577"  "54578"  "54579"  "54600"  "54657"  "54658"  "54659"  "54963"
[33] "574537" "64816"  "7083"   "7084"   "7172"   "7363"   "7364"   "7365"
[41] "7366"   "7367"   "7371"   "7372"   "7378"   "7498"   "79799"  "83549"
[49] "8824"   "8833"   "9"      "978"

$`hsa00230 Purine metabolism`
  [1] "100"    "10201"  "10606"  "10621"  "10622"  "10623"  "107"    "10714"
  [9] "108"    "10846"  "109"    "111"    "11128"  "11164"  "112"    "113"
 [17] "114"    "115"    "122481" "122622" "124583" "132"    "158"    "159"
 [25] "1633"   "171568" "1716"   "196883" "203"    "204"    "205"    "221823"
 [33] "2272"   "22978"  "23649"  "246721" "25885"  "2618"   "26289"  "270"
 [41] "271"    "27115"  "272"    "2766"   "2977"   "2982"   "2983"   "2984"
 [49] "2986"   "2987"   "29922"  "3000"   "30833"  "30834"  "318"    "3251"
 [57] "353"    "3614"   "3615"   "3704"   "377841" "471"    "4830"   "4831"
 [65] "4832"   "4833"   "4860"   "4881"   "4882"   "4907"   "50484"  "50940"
 [73] "51082"  "51251"  "51292"  "5136"   "5137"   "5138"   "5139"   "5140"
 [81] "5141"   "5142"   "5143"   "5144"   "5145"   "5146"   "5147"   "5148"
 [89] "5149"   "5150"   "5151"   "5152"   "5153"   "5158"   "5167"   "5169"
 [97] "51728"  "5198"   "5236"   "5313"   "5315"   "53343"  "54107"  "5422"
[105] "5424"   "5425"   "5426"   "5427"   "5430"   "5431"   "5432"   "5433"
[113] "5434"   "5435"   "5436"   "5437"   "5438"   "5439"   "5440"   "5441"
[121] "5471"   "548644" "55276"  "5557"   "5558"   "55703"  "55811"  "55821"
[129] "5631"   "5634"   "56655"  "56953"  "56985"  "57804"  "58497"  "6240"
[137] "6241"   "64425"  "646625" "654364" "661"    "7498"   "8382"   "84172"
[145] "84265"  "84284"  "84618"  "8622"   "8654"   "87178"  "8833"   "9060"
[153] "9061"   "93034"  "953"    "9533"   "954"    "955"    "956"    "957"
```

```
[161] "9583"   "9615"
```

```r
foldchanges <- res$log2FoldChange
names(foldchanges) <- res$entrez

foldchanges <- foldchanges[!is.na(names(foldchanges))]
foldchanges <- foldchanges[!is.na(foldchanges)]

head(foldchanges)
```

```
     1266     54855      1465      2034      2150      6659 
-2.422719  3.201955 -2.313738 -1.888019  3.344508  2.392288 
```

Let's run KEGG pathway enrichment with gage

```r
keggres <- gage(foldchanges, gsets = kegg.sets.hs)
```

Let's take a peek at the top pathways

```r
head(keggres$greater)
```

```
                                       p.geomean stat.mean       p.val
hsa00140 Steroid hormone biosynthesis 0.002628156  2.958807 0.002628156
hsa04640 Hematopoietic cell lineage   0.002754415  2.854328 0.002754415
hsa04630 Jak-STAT signaling pathway   0.004331117  2.653220 0.004331117
hsa04142 Lysosome                     0.009214681  2.373850 0.009214681
hsa04740 Olfactory transduction       0.017795693  2.158587 0.017795693
hsa04976 Bile secretion               0.025431268  1.981830 0.025431268
                                          q.val set.size        exp1
hsa00140 Steroid hormone biosynthesis 0.2203532       23 0.002628156
hsa04640 Hematopoietic cell lineage   0.2203532       48 0.002754415
hsa04630 Jak-STAT signaling pathway   0.2309929       99 0.004331117
hsa04142 Lysosome                     0.3685873      116 0.009214681
hsa04740 Olfactory transduction       0.5694622       35 0.017795693
hsa04976 Bile secretion               0.5787993       42 0.025431268
```

```r
head(keggres$less)
```

```
                                        p.geomean stat.mean        p.val
hsa04110 Cell cycle                   1.195945e-05 -4.312136 1.195945e-05
hsa03030 DNA replication              9.289098e-05 -3.955346 9.289098e-05
hsa04114 Oocyte meiosis               1.245232e-03 -3.064837 1.245232e-03
hsa03013 RNA transport                2.548790e-03 -2.830112 2.548790e-03
hsa03440 Homologous recombination     3.074552e-03 -2.851878 3.074552e-03
hsa00010 Glycolysis / Gluconeogenesis 8.334721e-03 -2.439491 8.334721e-03
                                            q.val set.size         exp1
hsa04110 Cell cycle                   0.001913512      120 1.195945e-05
hsa03030 DNA replication              0.007431278       36 9.289098e-05
hsa04114 Oocyte meiosis               0.066412358       98 1.245232e-03
hsa03013 RNA transport                0.098385671      142 2.548790e-03
hsa03440 Homologous recombination     0.098385671       28 3.074552e-03
hsa00010 Glycolysis / Gluconeogenesis 0.196779852       46 8.334721e-03
```

KEGG

Top 5 upregulated KEGG pathways:

```
keggrespathways_up <- rownames(keggres$greater)[1:5]
keggresids_up <- substr(keggrespathways_up, start = 1, stop = 8)
keggresids_up
```

```
[1] "hsa00140" "hsa04640" "hsa04630" "hsa04142" "hsa04740"
```

Plotting top 5 upregulated pathways:

```
pathview(gene.data = foldchanges, pathway.id = keggresids_up, species = "hsa")
```

```
'select()' returned 1:1 mapping between keys and columns

Info: Working in directory /Users/cyrusshabahang/Desktop/BIMM 143 Lab/class14

Info: Writing image file hsa00140.pathview.png

'select()' returned 1:1 mapping between keys and columns

Info: Working in directory /Users/cyrusshabahang/Desktop/BIMM 143 Lab/class14
```

```
Info: Writing image file hsa04640.pathview.png

'select()' returned 1:1 mapping between keys and columns

Info: Working in directory /Users/cyrusshabahang/Desktop/BIMM 143 Lab/class14

Info: Writing image file hsa04630.pathview.png

'select()' returned 1:1 mapping between keys and columns

Info: Working in directory /Users/cyrusshabahang/Desktop/BIMM 143 Lab/class14

Info: Writing image file hsa04142.pathview.png

'select()' returned 1:1 mapping between keys and columns

Info: Working in directory /Users/cyrusshabahang/Desktop/BIMM 143 Lab/class14

Info: Writing image file hsa04740.pathview.png
```

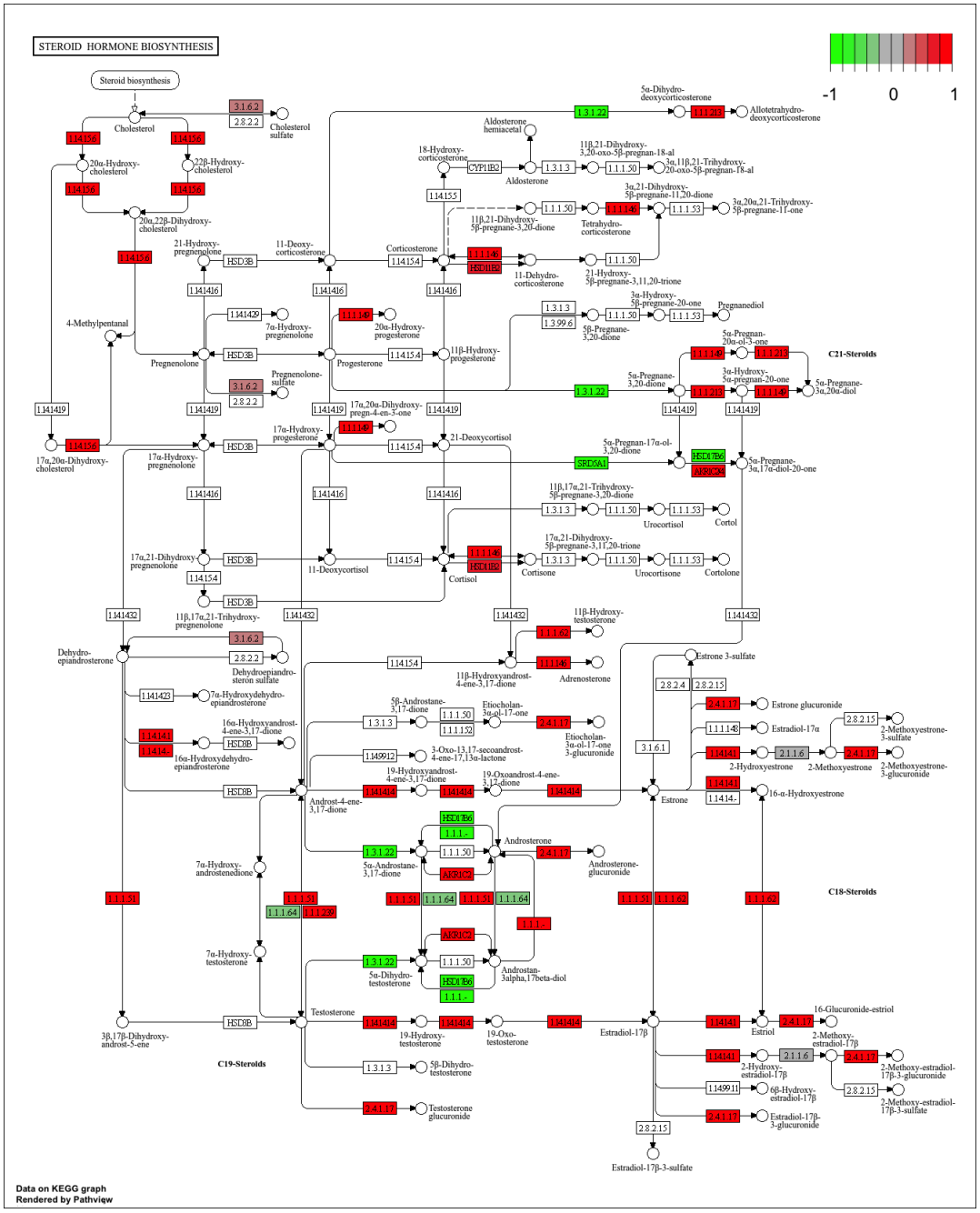
STEROID HORMONE BIOSYNTHESIS
-1
0
1
Steroid biosynthesis
Cholesterol
Cholesterol sulfate
20α-Hydroxy-cholesterol
22β-Hydroxy-cholesterol
20α,22β-Dihydroxy-cholesterol
17α,20α-Dihydroxy-cholesterol
4-Methylpentanal
21-Hydroxy-pregnenolone
11-Deoxy-corticosterone
Corticosterone
Aldosterone hemiacetal
18-Hydroxy-corticosterone
Aldosterone
11β,21-Dihydroxy-3,20-oxo-5β-pregnan-18-al
3α,11β,21-Trihydroxy-20-oxo-5β-pregnan-18-al
3α,21-Dihydroxy-5β-pregnane-11,20-dione
3α,20α,21-Trihydroxy-5β-pregnane-11-one
Tetrahydro-corticosterone
11β,21-Dihydroxy-5β-pregnane-3,20-dione
11-Dehydro-corticosterone
21-Hydroxy-5β-pregnane-3,11,20-trione
5α-Dihydro-deoxycorticosterone
Allotetrahydro-deoxycorticosterone
Pregnenolone
7α-Hydroxy-pregnenolone
20α-Hydroxy-progesterone
Progesterone
11β-Hydroxy-progesterone
Pregnenolone-sulfate
17α,20α-Dihydroxy-pregn-4-en-3-one
17α-Hydroxy-progesterone
21-Deoxycortisol
17α-Hydroxy-pregnenolone
3α-Hydroxy-5β-pregnane-20-one
Pregnanediol
5β-Pregnane-3,20-dione
5α-Pregnan-20α-ol-3-one
C21-Steroids
5α-Pregnane-3,20-dione
3α-Hydroxy-5α-pregnan-20-one
5α-Pregnane-3α,20α-diol
5α-Pregnan-17α-ol-3,20-dione
5α-Pregnane-3α,17α-diol-20-one
11β,17α,21-Trihydroxy-5β-pregnane-3,20-dione
Urocortisol
Cortol
17α,21-Dihydroxy-pregnenolone
11-Deoxycortisol
Cortisol
17α,21-Dihydroxy-5β-pregnane-3,11,20-trione
Cortisone
Urocortisone
Cortolone
11β,17α,21-Trihydroxy-pregnenolone
11β-Hydroxy-testosterone
Dehydro-epiandrosterone
Dehydroepiandro-sterón sulfate
11β-Hydroxyandrost-4-ene-3,17-dione
Adrenosterone
7α-Hydroxydehydro-epiandrosterone
16α-Hydroxyandrost-4-ene-3,17-dione
16α-Hydroxydehydro-epiandrosterone
5β-Androstane-3,17-dione
Etiocholan-3α-ol-17-one
Etiocholan-3α-ol-17-one 3-glucuronide
3-Oxo-13,17-secoandrost-4-ene-17,13α-lactone
19-Hydroxyandrost-4-ene-3,17-dione
19-Oxoandrost-4-ene-3,17-dione
Androst-4-ene-3,17-dione
Estrone 3-sulfate
Estrone glucuronide
Estradiol-17α
2-Hydroxyestrone
2-Methoxyestrone
2-Methoxyestrone-3-sulfate
2-Methoxyestrone-3-glucuronide
Estrone
16-α-Hydroxyestrone
Androsterone
Androsterone-glucuronide
7α-Hydroxy-androstenedione
5α-Androstane-3,17-dione
C18-Steroids
7α-Hydroxy-testosterone
5α-Dihydro-testosterone
Androstan-3alpha,17beta-diol
Testosterone
3β,17β-Dihydroxy-androst-5-ene
19-Hydroxy-testosterone
19-Oxo-testosterone
Estradiol-17β
Estriol
16-Glucuronide-estriol
2-Methoxy-estradiol-17β
2-Hydroxy-estradiol-17β
2-Methoxy-estradiol-17β-3-glucuronide
6β-Hydroxy-estradiol-17β
2-Methoxy-estradiol-17β-3-sulfate
Estradiol-17β-3-glucuronide
C19-Steroids
5β-Dihydro-testosterone
Testosterone glucuronide
Estradiol-17β-3-sulfate
Data on KEGG graph
Rendered by Pathview

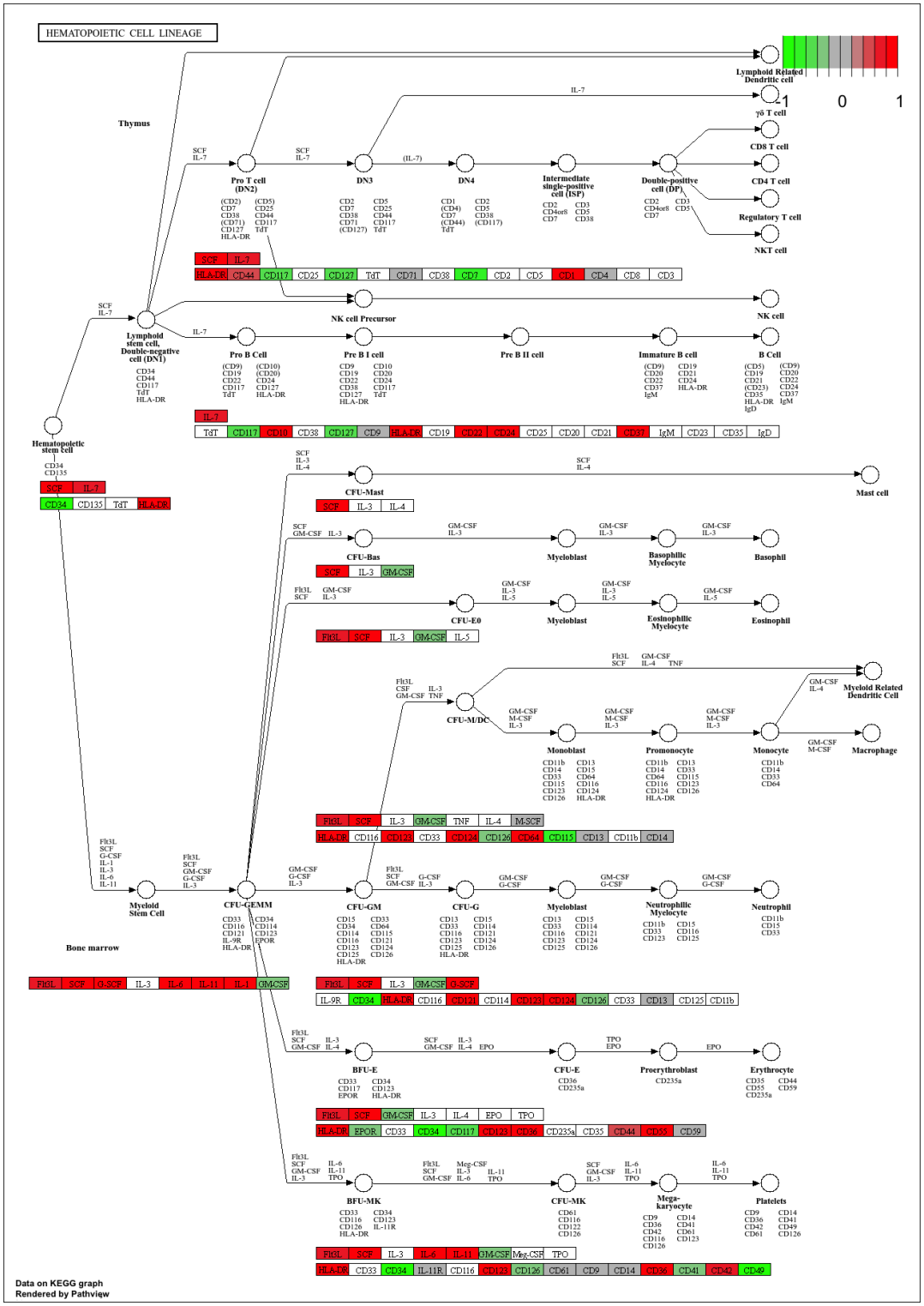
HEMATOPOIETIC CELL LINEAGE
-1
0
1
Lymphoid Related Dendritic cell
γδ T cell
CD8 T cell
CD4 T cell
Regulatory T cell
NKT cell
Thymus
Pro T cell (DN2)
DN3
DN4
Intermediate single-positive cell (ISP)
Double-positive cell (DP)
NK cell Precursor
NK cell
Lymphoid stem cell, Double-negative cell (DN1)
Pro B Cell
Pre B I cell
Pre B II cell
Immature B cell
B Cell
Hematopoietic stem cell
CFU-Mast
Mast cell
CFU-Bas
Myeloblast
Basophilic Myelocyte
Basophil
CFU-E0
Eosinophilic Myelocyte
Eosinophil
CFU-M/DC
Monoblast
Promonocyte
Monocyte
Myeloid Related Dendritic Cell
Macrophage
Myeloid Stem Cell
CFU-GEMM
CFU-GM
CFU-G
Neutrophilic Myelocyte
Neutrophil
Bone marrow
BFU-E
CFU-E
Proerythroblast
Erythrocyte
BFU-MK
CFU-MK
Mega-karyocyte
Platelets
Data on KEGG graph
Rendered by Pathview

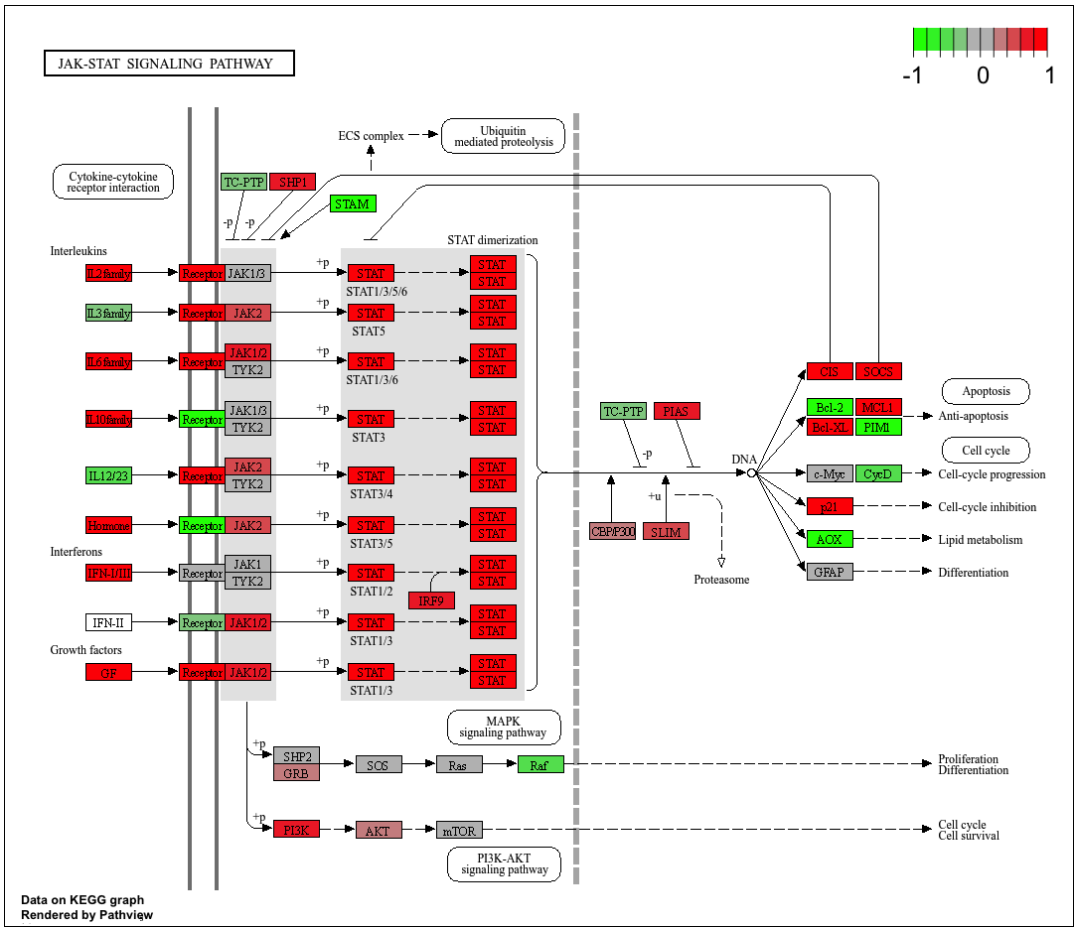
JAK-STAT SIGNALING PATHWAY
-1
0
1
ECS complex
Ubiquitin mediated proteolysis
Cytokine-cytokine receptor interaction
TC-PTP
SHP1
STAM
STAT dimerization
Interleukins
IL2 family
IL3 family
IL6 family
IL10 family
IL12/23
Hormone
Interferons
IFN-I/III
IFN-II
Growth factors
GF
Receptor
JAK1/3
JAK2
JAK1/2
TYK2
JAK1
STAT
STAT1/3/5/6
STAT5
STAT1/3/6
STAT3
STAT3/4
STAT3/5
STAT1/2
STAT1/3
IRF9
TC-PTP
PIAS
CBP/P300
SLIM
DNA
Proteasome
CIS
SOCS
Bcl-2
MCL1
Bcl-XL
PIM1
c-Myc
CycD
p21
ACX
GFAP
Apoptosis
Anti-apoptosis
Cell cycle
Cell-cycle progression
Cell-cycle inhibition
Lipid metabolism
Differentiation
MAPK signaling pathway
SHP2
GRB
SOS
Ras
Raf
Proliferation
Differentiation
PI3K
AKT
mTOR
Cell cycle
Cell survival
PI3K-AKT signaling pathway
Data on KEGG graph
Rendered by Pathview

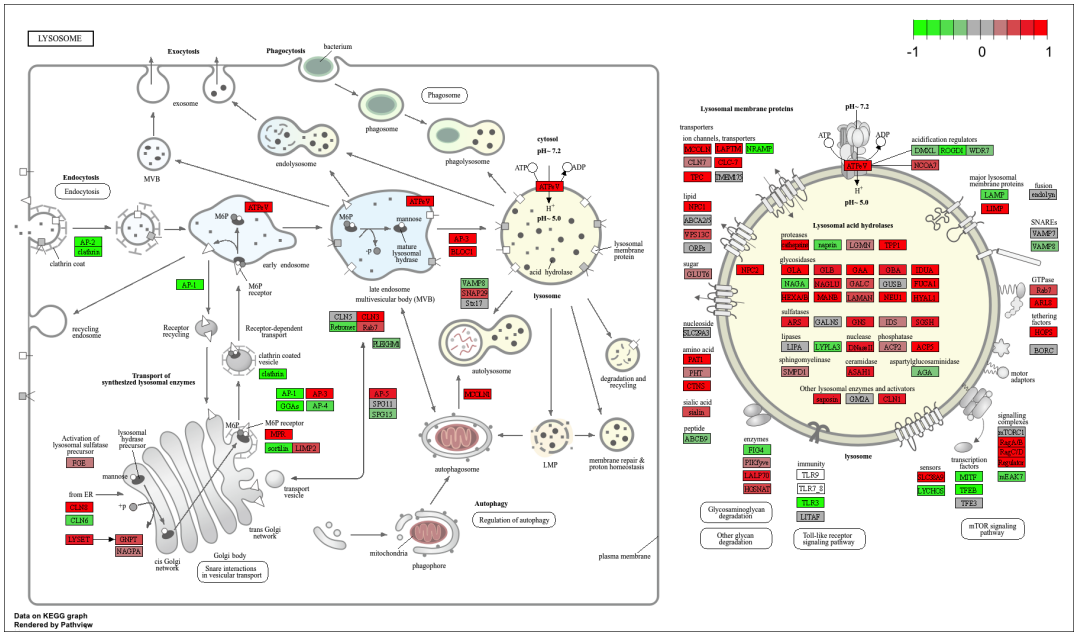
LYSOSOME
Exocytosis
Phagocytosis
bacterium
exosome
Phagosome
phagosome
endolysosome
phagolysosome
MVB
Endocytosis
Endocytosis
clathrin coat
AP-2
clathrin
M6P
M6P receptor
early endosome
late endosome
multivesicular body (MVB)
mannose
mature lysosomal hydrolase
cytosol
pH~7.2
ATP
ADP
ATP6V1
H+
pH~5.0
acid hydrolase
lysosomal membrane protein
lysosome
AP-1
recycling endosome
Receptor recycling
Receptor-dependent transport
clathrin coated vesicle
Transport of synthesized lysosomal enzymes
AP-3
AP-4
autolysosome
degradation and recycling
Activation of lysosomal sulfatase precursor
lysosomal hydrase precursor
mannose
from ER
trans Golgi network
cis Golgi network
Golgi body
transport vesicle
autophagosome
LMP
membrane repair & proton homoistasis
Autophagy
Regulation of autophagy
mitochondria
phagophore
plasma membrane
Store interactions in vesicular transport
Lysosomal membrane proteins
transporters
ion channels, transporters
acidification regulators
major lysosomal membrane proteins
fusion
lipid
SNAREs
sugar
GTPase
tethering factors
nucleoside
amino acid
motor adaptors
sialic acid
peptide
Lysosomal acid hydrolases
proteases
glycosidases
sulfatases
lipases
nuclease
phosphatase
sphingomyelinase
ceramidase
aspartylglucosaminidase
Other lysosomal enzymes and activators
signalling complexes
enzymes
immunity
sensors
transcription factors
Glycosaminoglycan degradation
Other glycan degradation
Toll-like receptor signaling pathway
mTOR signaling pathway
-1
0
1
Data on KEGG graph
Rendered by Pathview

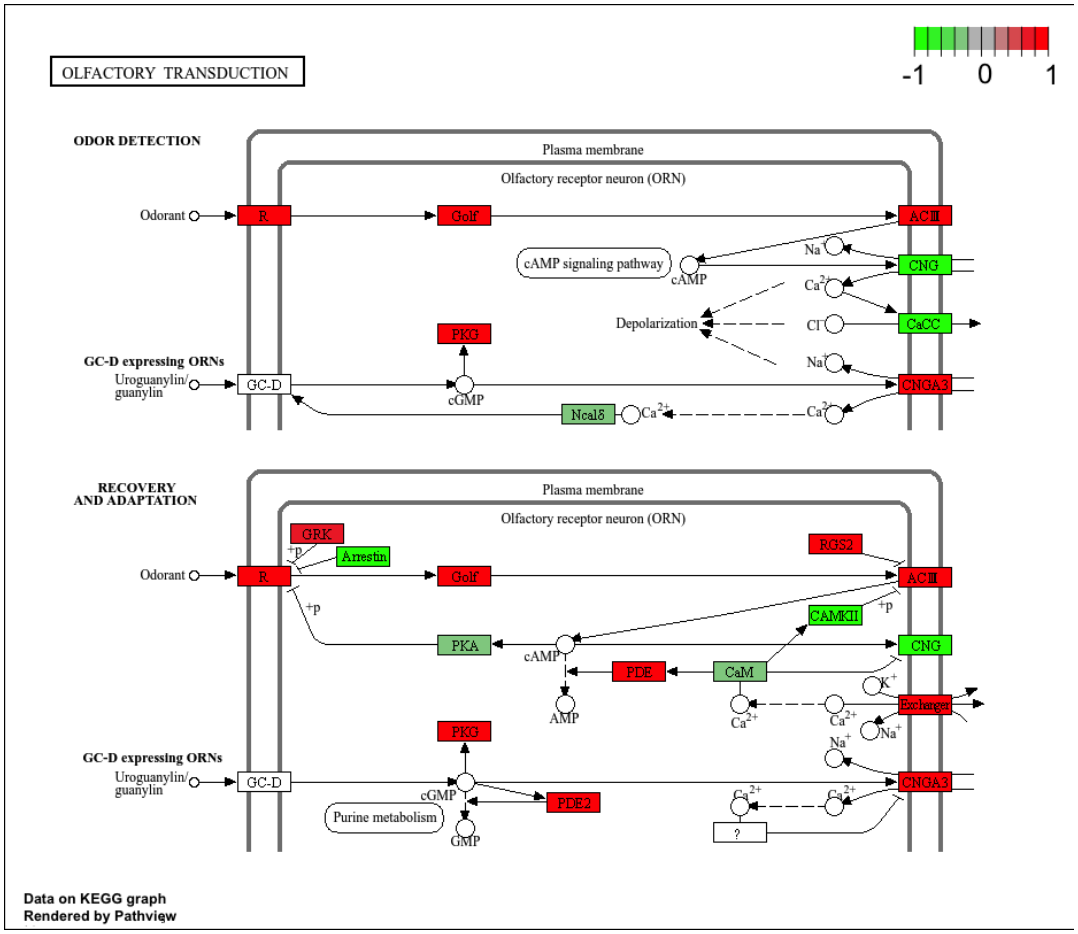

Top 5 downregulated KEGG pathways

```
keggrespathways_down <- rownames(keggres$less)[1:5]
keggresids_down <- substr(keggrespathways_down, start = 1, stop = 8)
keggresids_down
```

```
[1] "hsa04110" "hsa03030" "hsa04114" "hsa03013" "hsa03440"
```

Plotting top 5 downregulated pathways:

```
data(go.sets.hs)
data(go.subs.hs)
```

Focusing on Biological Process only

```r
gobpsets <- go.sets.hs[go.subs.hs$BP]
```

Running gage on GO BP sets:

```r
gobpres <- gage(foldchanges, gsets = gobpsets)
```

Let's view the top GO Biological Process terms:

```r
head(gobpres$greater) #upregulated GO BP
```

```
                                          p.geomean stat.mean        p.val
GO:0007156 homophilic cell adhesion       2.148684e-05  4.183707 2.148684e-05
GO:0060429 epithelium development         8.115661e-05  3.788203 8.115661e-05
GO:0048729 tissue morphogenesis           2.169820e-04  3.534688 2.169820e-04
GO:0002009 morphogenesis of an epithelium 2.337841e-04  3.518313 2.337841e-04
GO:0007610 behavior                       4.656695e-04  3.324713 4.656695e-04
GO:0016337 cell-cell adhesion             5.260992e-04  3.292769 5.260992e-04
                                               q.val set.size         exp1
GO:0007156 homophilic cell adhesion       0.08403505      101 2.148684e-05
GO:0060429 epithelium development         0.15870175      459 8.115661e-05
GO:0048729 tissue morphogenesis           0.22858239      388 2.169820e-04
GO:0002009 morphogenesis of an epithelium 0.22858239      314 2.337841e-04
GO:0007610 behavior                       0.34292898      380 4.656695e-04
GO:0016337 cell-cell adhesion             0.34292898      305 5.260992e-04
```

```r
head(gobpres$less)   #downregulated GO BP
```

```
                                          p.geomean stat.mean        p.val
GO:0000279 M phase                       8.593273e-17 -8.395427 8.593273e-17
GO:0048285 organelle fission             7.096733e-16 -8.169833 7.096733e-16
GO:0000280 nuclear division              1.938973e-15 -8.050259 1.938973e-15
GO:0007067 mitosis                       1.938973e-15 -8.050259 1.938973e-15
GO:0000087 M phase of mitotic cell cycle 5.596705e-15 -7.901860 5.596705e-15
GO:0007059 chromosome segregation        1.246925e-11 -6.966576 1.246925e-11
                                               q.val set.size         exp1
GO:0000279 M phase                       3.360829e-13      484 8.593273e-17
GO:0048285 organelle fission             1.387766e-12      370 7.096733e-16
GO:0000280 nuclear division              1.895831e-12      346 1.938973e-15
GO:0007067 mitosis                       1.895831e-12      346 1.938973e-15
GO:0000087 M phase of mitotic cell cycle 4.377742e-12      356 5.596705e-15
GO:0007059 chromosome segregation        8.127870e-09      139 1.246925e-11
```

Reactome

Significant genes for Reactome upload:

```
sig_genes <- res[res$padj <= 0.05 & !is.na(res$padj), "symbol"]
```

Let's remove the missing symbols:

```
sig_genes <- sig_genes[!is.na(sig_genes)]
length(sig_genes)
```

```
[1] 8122
```

Total number of significant genes is 8122.

Text file for Reactome website upload:

```
write.table(sig_genes,
            file = "significant_genes.txt",
            row.names = FALSE,
            col.names = FALSE,
            quote = FALSE)
```

> Q: What pathway has the most significant "Entities p-value"? Do the most significant pathways listed match your previous KEGG results? What factors could cause differences between the two methods?

The pathway with the most significant "Entities p-value" is Cell Cycle, Mitotic with a p-value of 2.08E-5. The sginificant Reactome pathways are generally consistent with the KEGG results. The factors that could cause differences between the two methods include differences in pathway database curation and pathway definitions. Some other factors are gene id mapping and differences in background gene sets.

```
sig_genes <- res[res$padj <= 0.05 & !is.na(res$padj), "symbol"]
sig_genes <- sig_genes[!is.na(sig_genes)]
print(paste("Total number of significant genes:", length(sig_genes)))
```

```
[1] "Total number of significant genes: 8122"
```

```r
write.table(sig_genes,
            file = "significant_genes.txt",
            row.names = FALSE,
            col.names = FALSE,
            quote = FALSE)
```