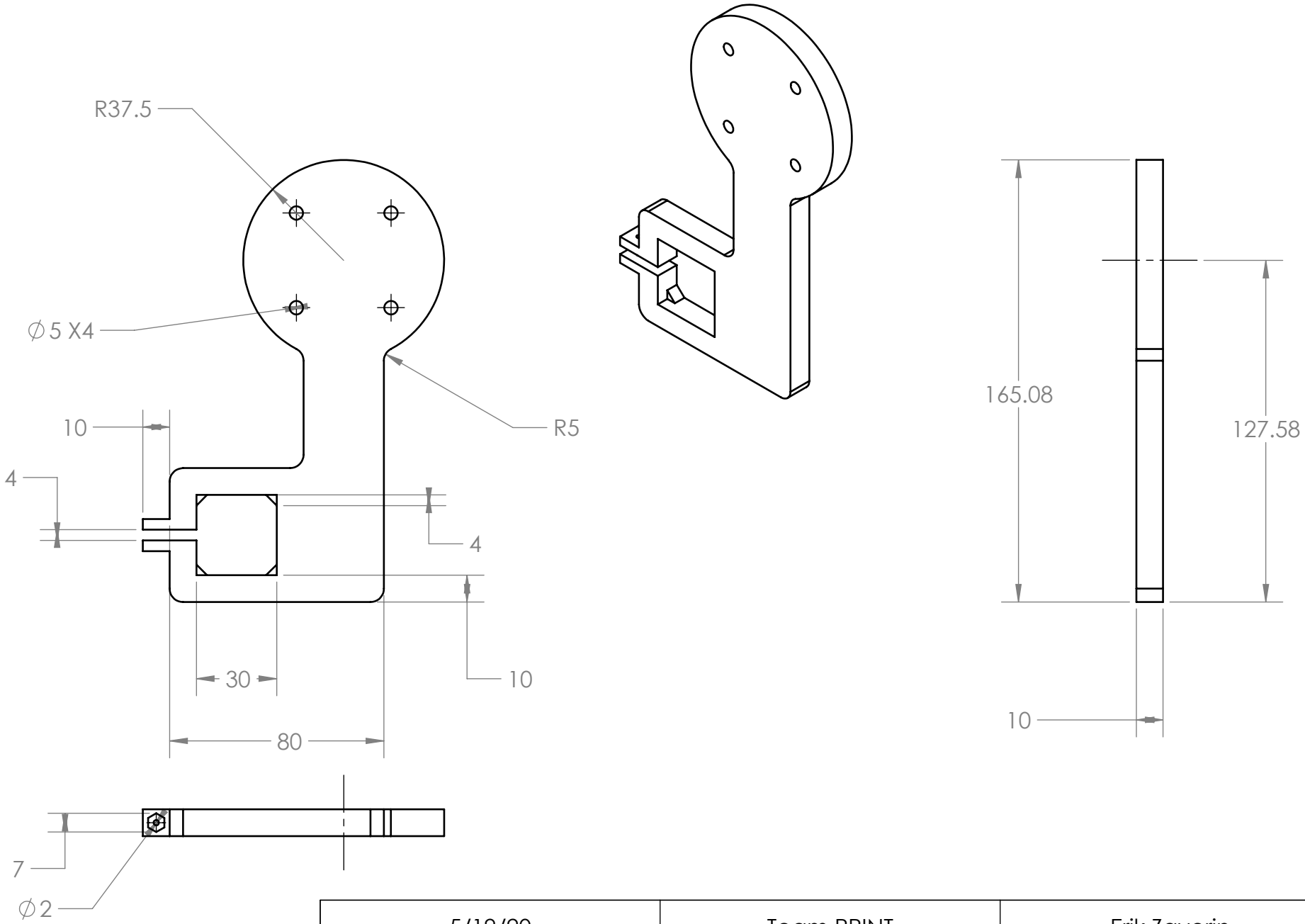

5/19/20	Team PRINT	Erik Zavorin
Units: SI (mm)	Extruder Mount mod. 2	Grade:

SOLIDWORKS Educational Product. For Instructional Use Only.