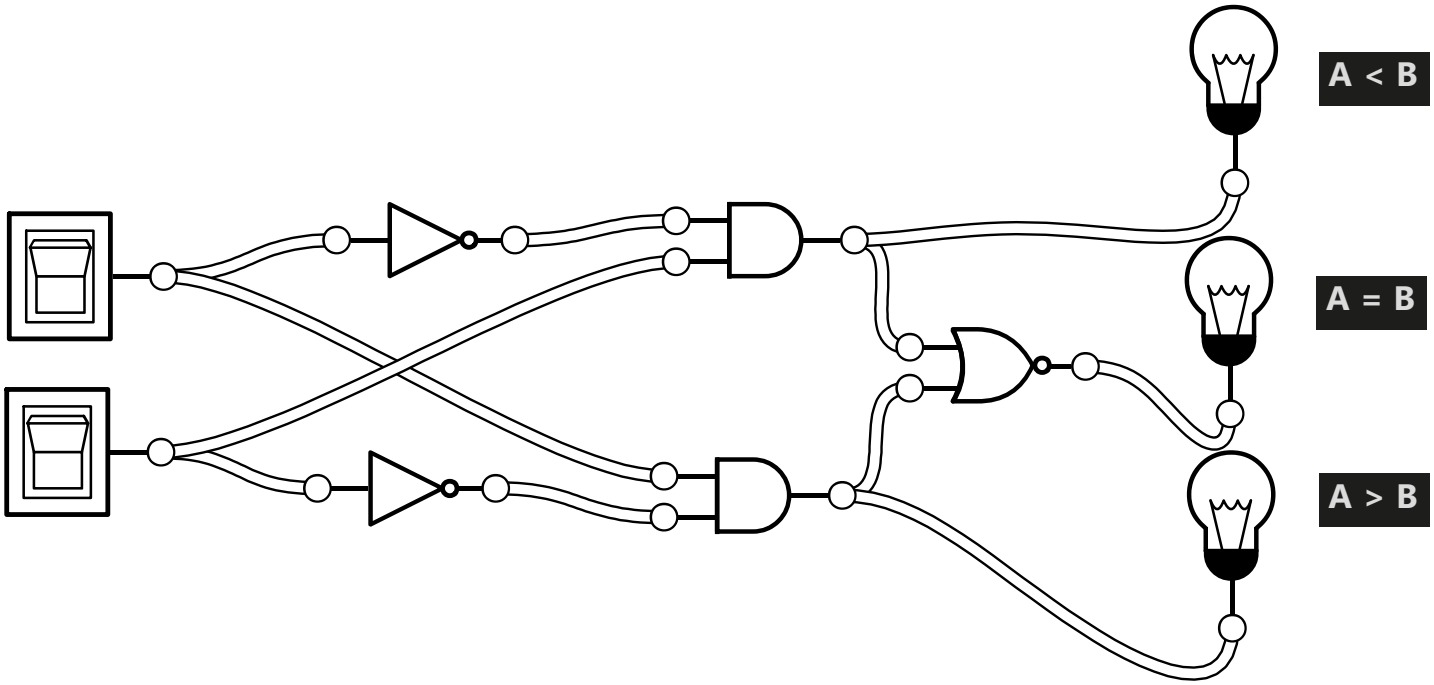
A < B
A = B
A > B

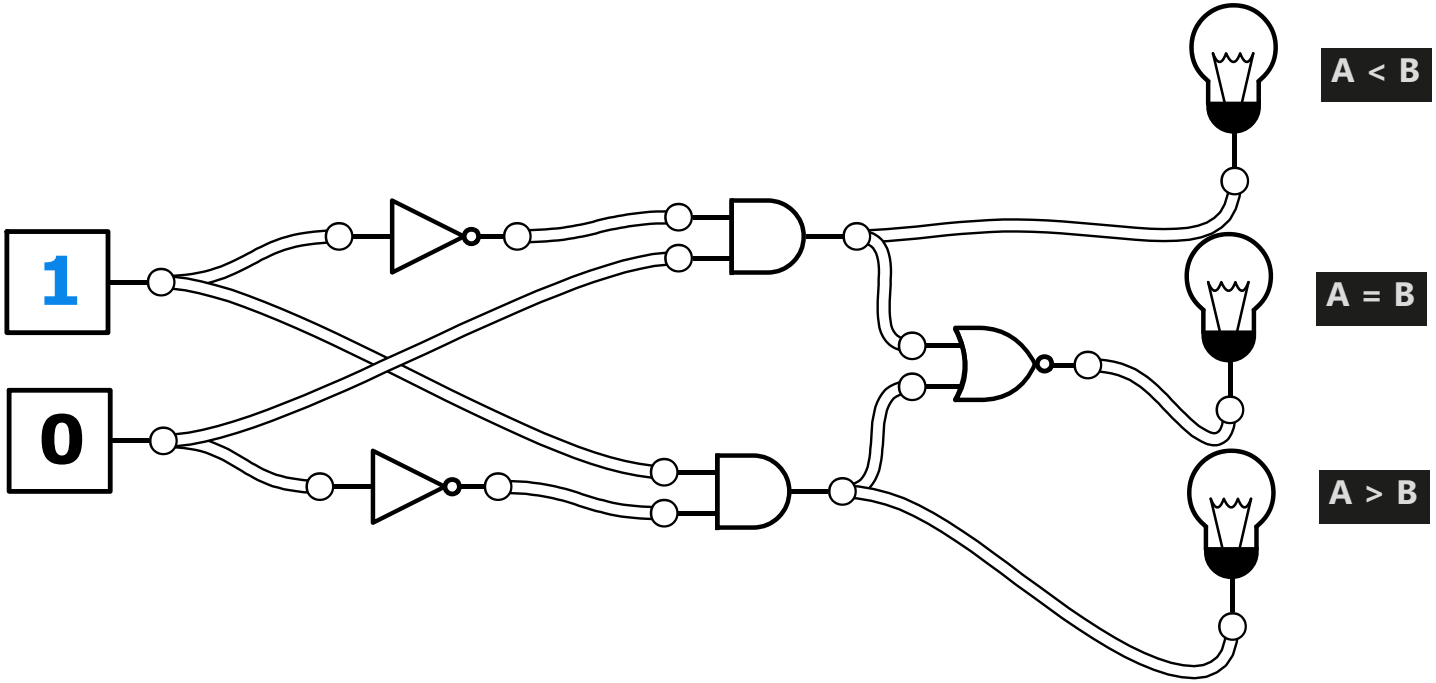
1
0
A < B
A = B
A > B