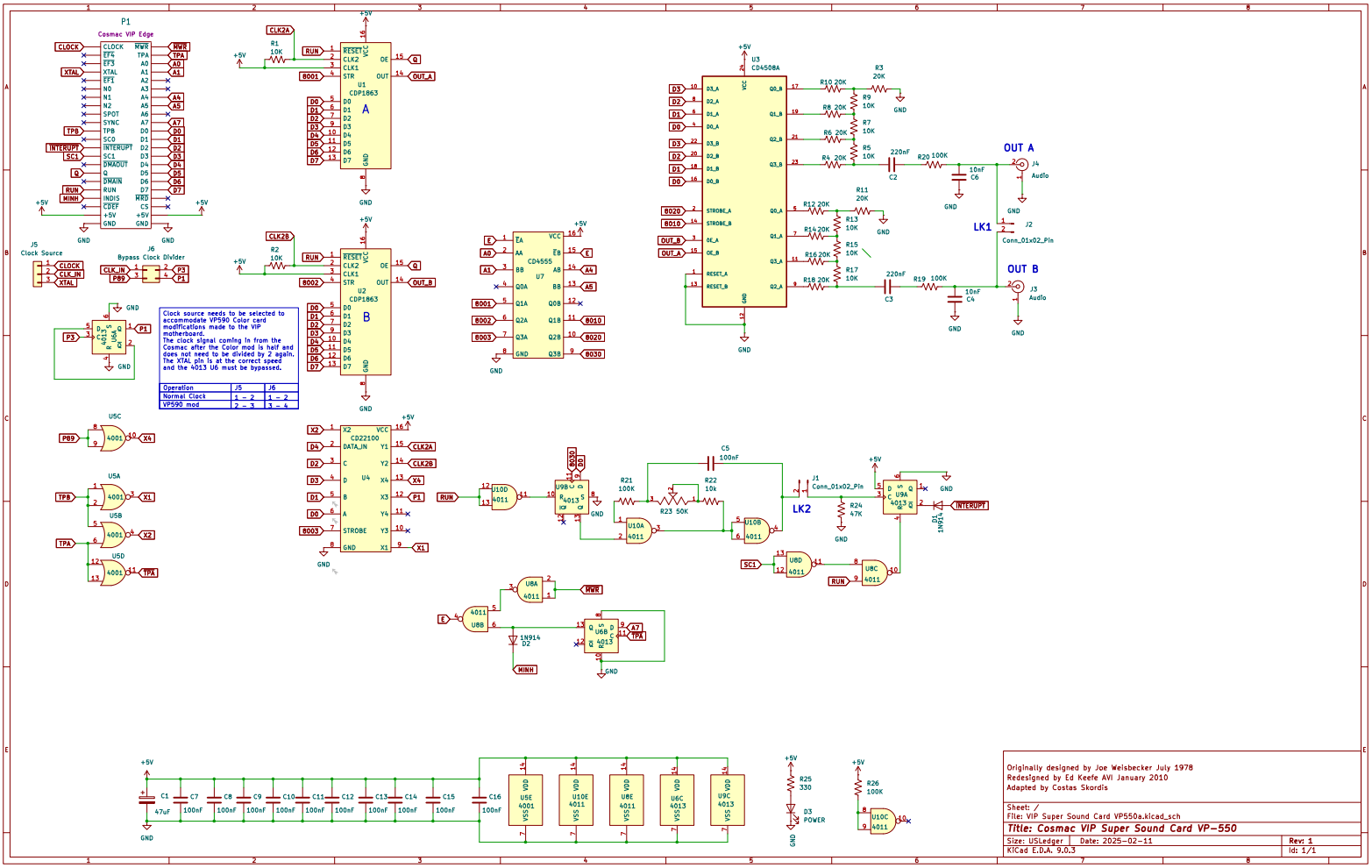
P1
Cosmac VIP Edge
U1
CDP1863
A
U2
CDP1863
B
U3
CD4508A
U4
CD22100
U7
CD4555
J5
Clock Source
J6
Bypass Clock Divider
OUT A
OUT B
LK1
LK2
J2
Conn_01x02_Pin
J4
Audio
J3
Audio
J1
Conn_01x02_Pin
Clock source needs to be selected to accommodate VP590 Color card modifications made to the VIP motherboard.
The clock signal coming in from the Cosmac after the Color mod is half and does not need to be divided by 2 again.
The XTAL pin is at the correct speed and the 4013 U6 must be bypassed.
Operation | J5 | J6
Normal Clock | 1 – 2 | 1 – 2
VP590 mod | 2 – 3 | 3 – 4
Originally designed by Joe Weisbecker July 1978
Redesigned by Ed Keefe AVI January 2010
Adapted by Costas Skordis
Sheet: /
File: VIP Super Sound Card VP550a.kicad_sch
Title: Cosmac VIP Super Sound Card VP-550
Size: USLedger
Date: 2025-02-11
Rev: 1
KiCad E.D.A. 9.0.3
Id: 1/1