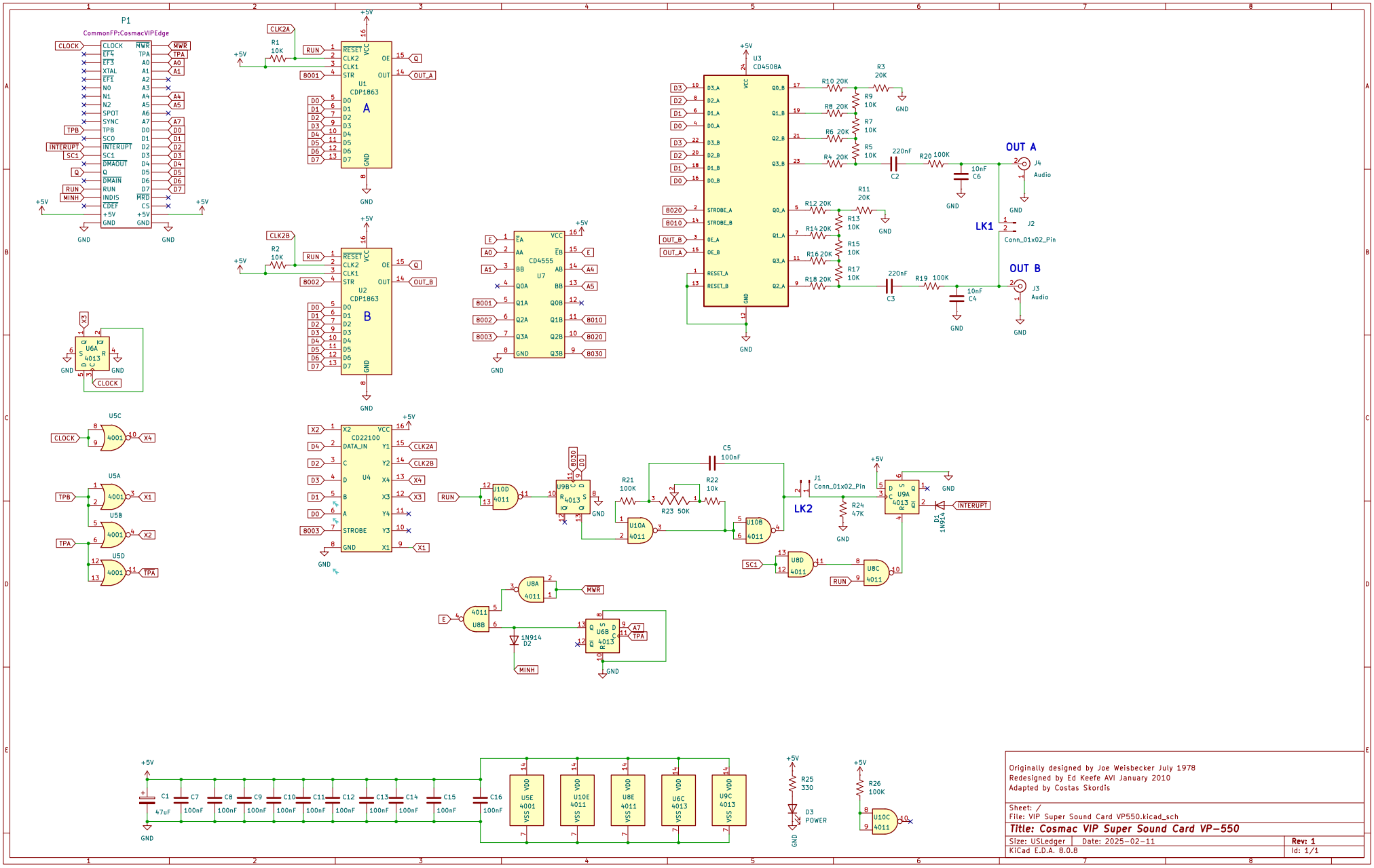

Originally designed by Joe Weisbecker July 1978
Redesigned by Ed Keefe AVI January 2010
Adapted by Costas Skordis

Sheet: /
File: VIP Super Sound Card VP550.kicad_sch

Title: Cosmac VIP Super Sound Card VP-550

Size: USLedger	Date: 2025-02-11	Rev: 1
KiCad E.D.A. 8.0.8		Id: 1/1