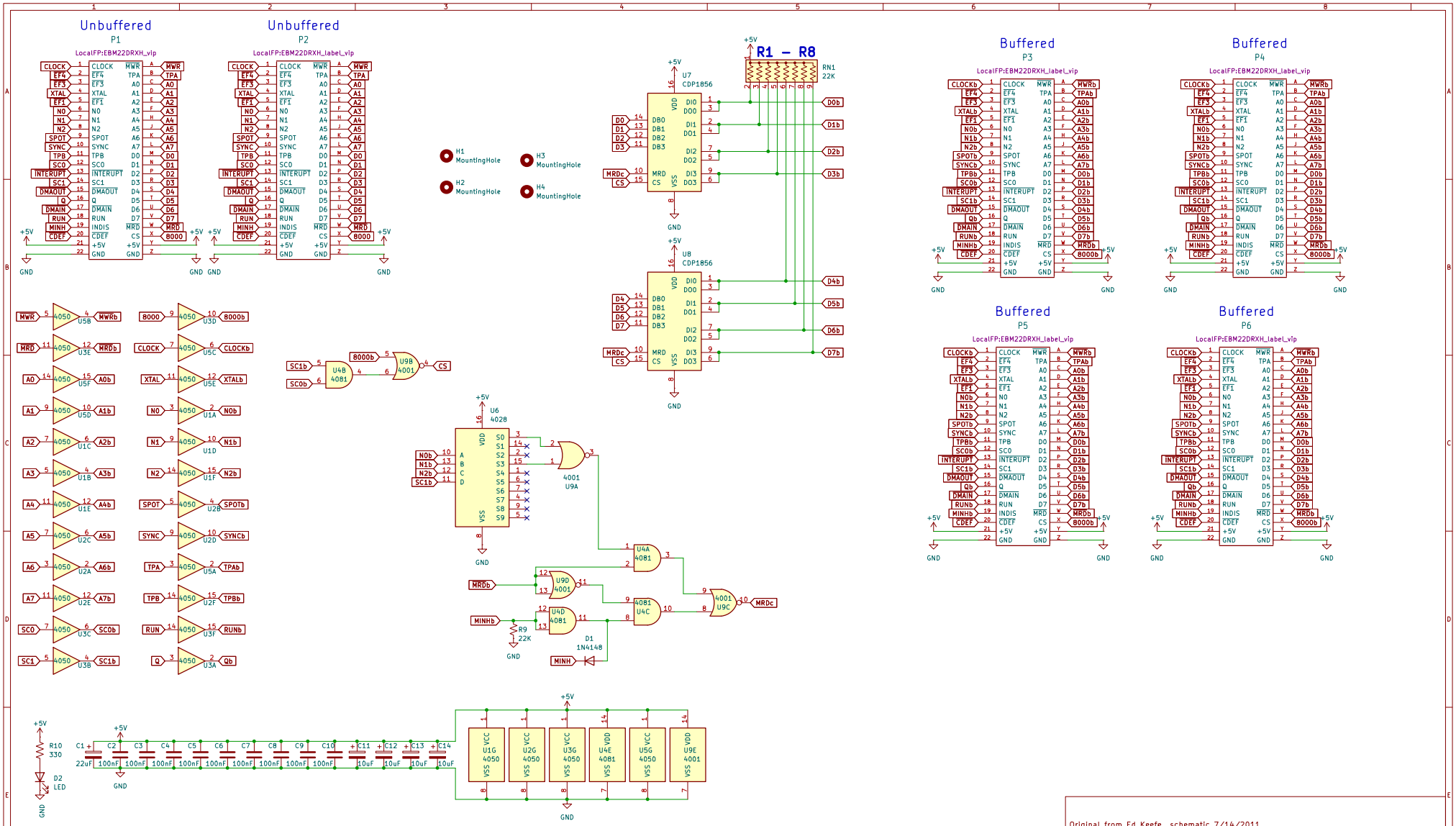

Original from Ed Keefe schematic 7/14/2011
Created by Costas Skordis

Sheet: /
File: VIP System Expansion Board VP575.kicad_sch

Title: VIP System Expansion Board VP575

Size: USLedger	Date: 2025-06-11	Rev: 1.0
KiCad E.D.A. 9.0.2		Id: 1/1