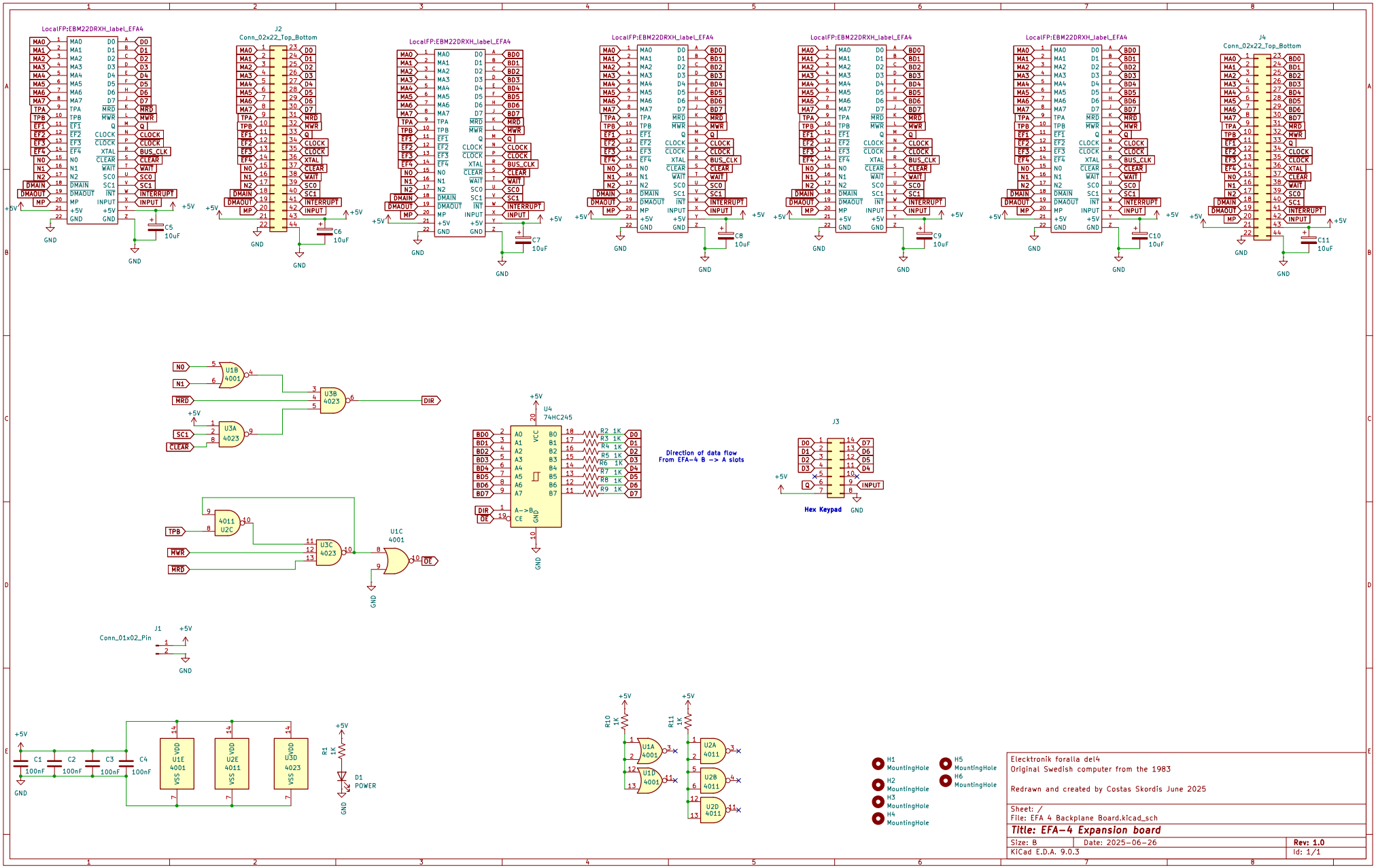

Elecktronik foralla del4
Original Swedish computer from the 1983

Redrawn and created by Costas Skordis June 2025

Sheet: /
File: EFA 4 Backplane Board.kicad_sch

Title: EFA-4 Expansion board

Size: B	Date: 2025-06-26	Rev: 1.0
KiCad E.D.A. 9.0.3		Id: 1/1