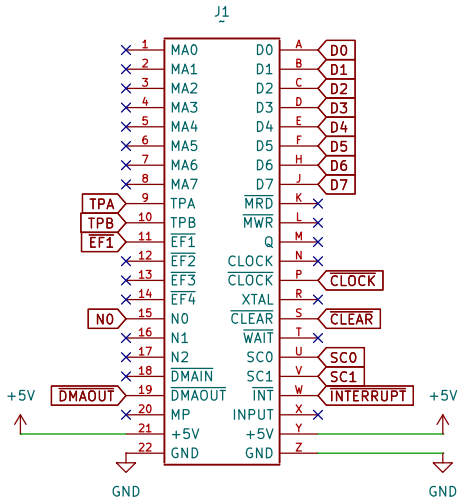

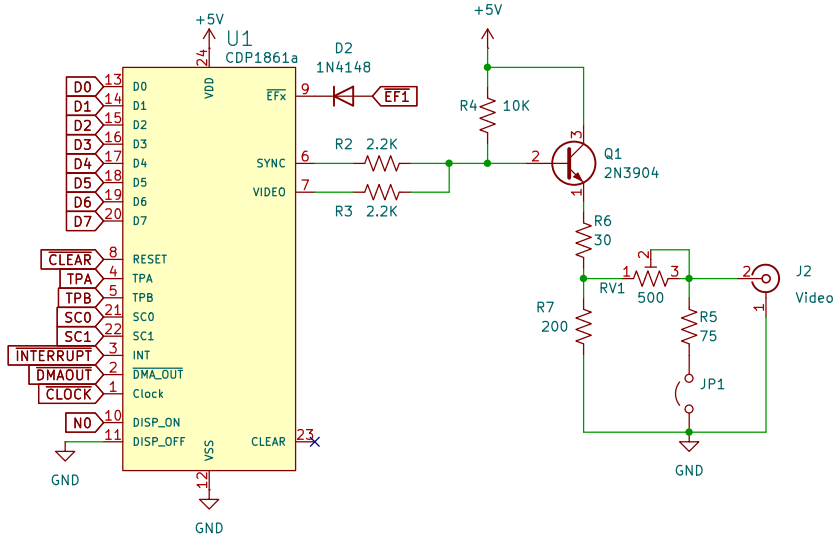

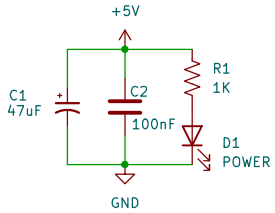

Adapted by Costas Skordis

Sheet: /
File: EFA 4 Pixie Board.kicad_sch

Title: EFA 4 Pixie board

Size: USLetter	Date: 2025-08-13	**Rev: 1.0a**
KiCad E.D.A. 9.0.3		Id: 1/1