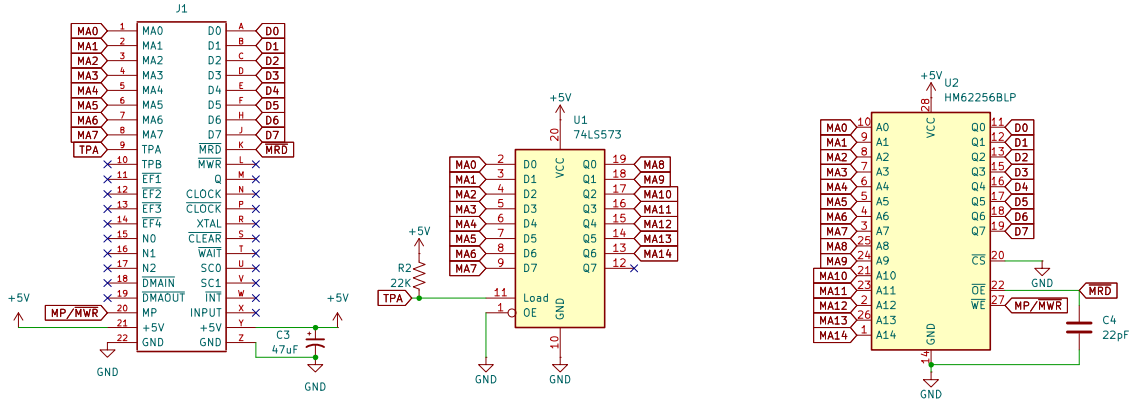

Adapted by Costas Skordis

Sheet: /
File: EFA 4 Ram 32K Board.kicad_sch

Title: EFA 4 32K RAM board

Size: USLetter	Date: 2025-08-13	Rev: 1.0a
KiCad E.D.A. 9.0.3		Id: 1/1