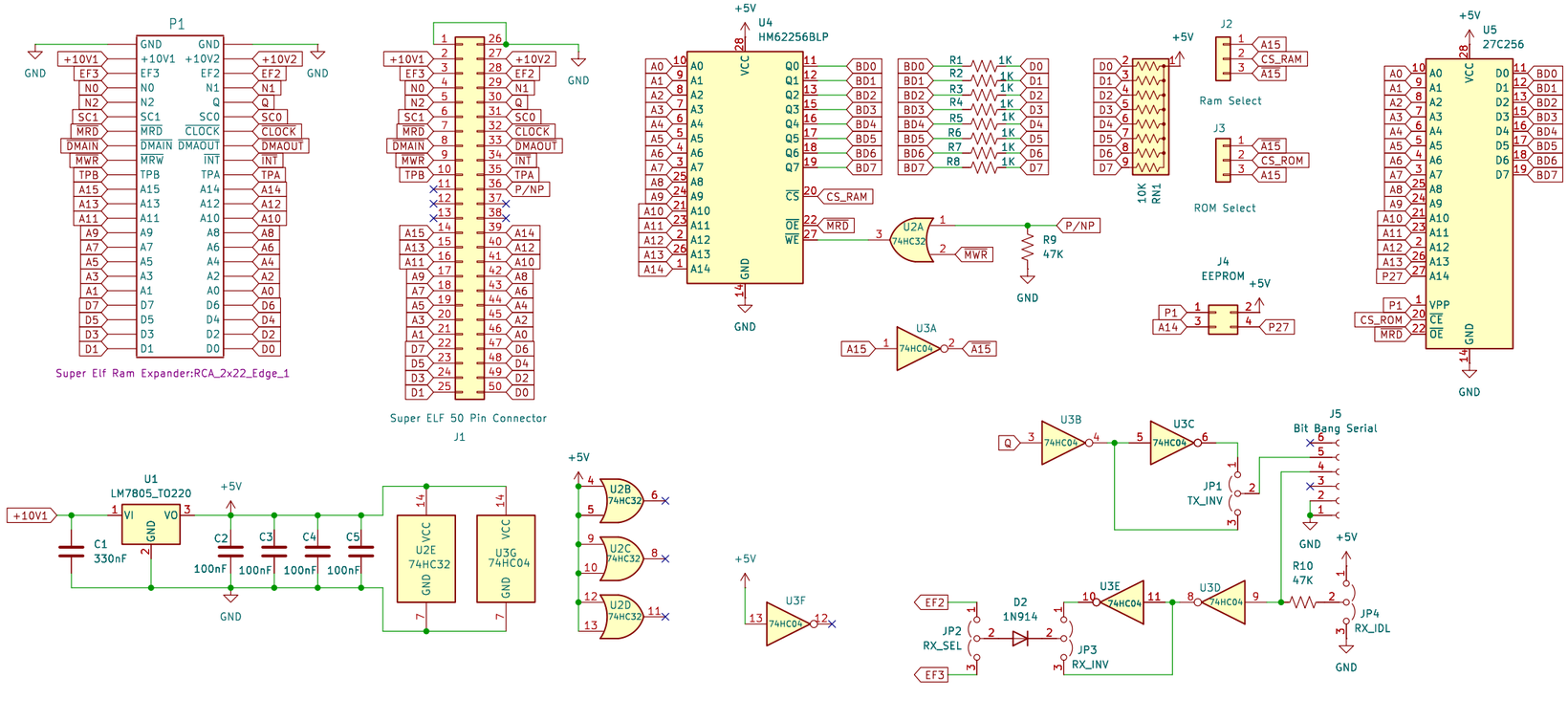

Concept and initial design by Andrew Wasson – https://github.com/awasson
and David Madole – https://github.com/dmadole

Costas Skordis August 2024

Sheet: /
File: Super Elf Ram Rom Expander v3.kicad_sch

Title: Super Elf Ram/Rom Expander Edge Connector

Size: USLedger	Date: 2024-08-27	**Rev: 3**
KiCad E.D.A. 8.0.4		Id: 1/1