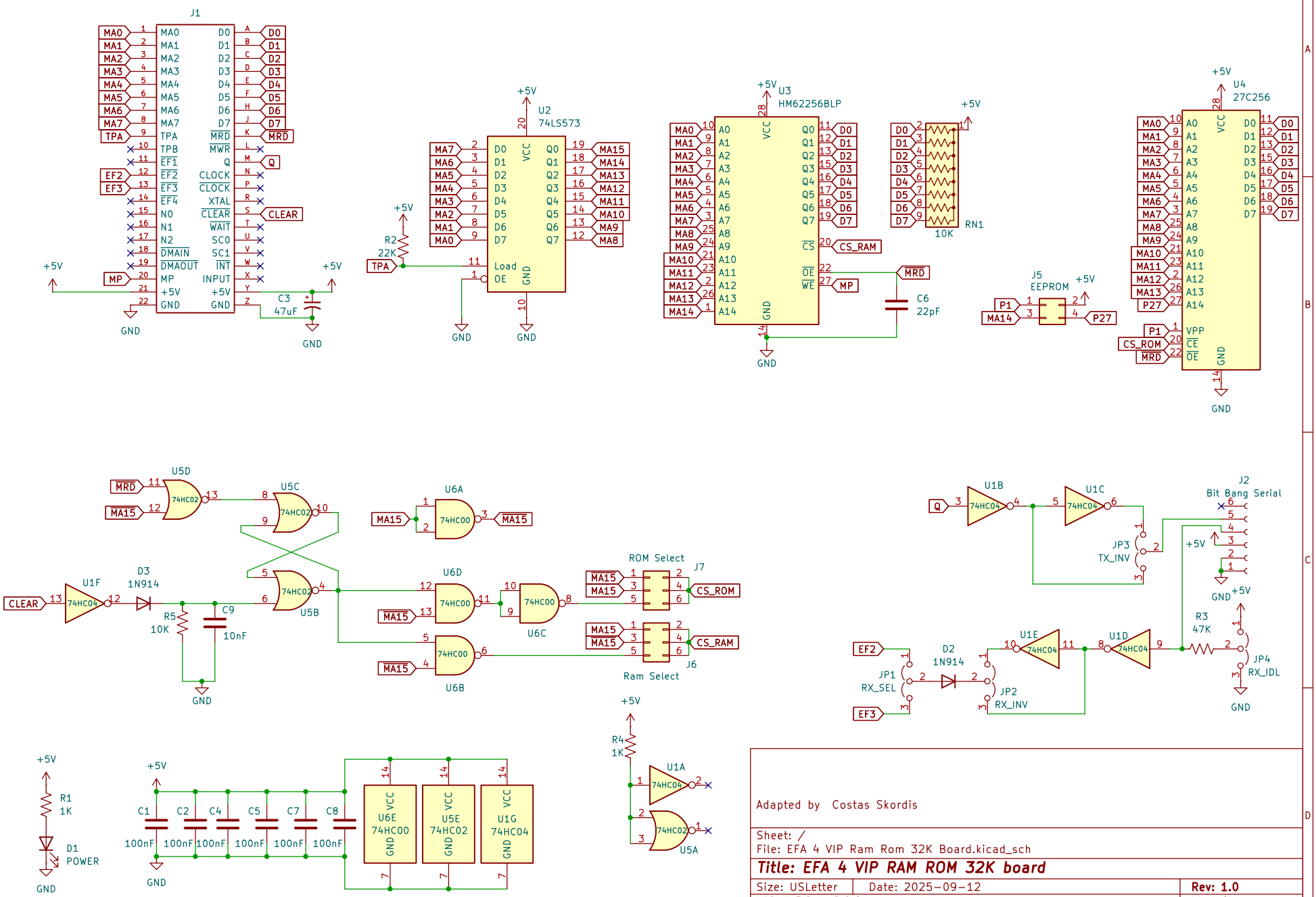

Adapted by Costas Skordis

Sheet: /
File: EFA 4 VIP Ram Rom 32K Board.kicad_sch

Title: EFA 4 VIP RAM ROM 32K board

Size: USLetter	Date: 2025-09-12	Rev: 1.0
KiCad E.D.A. 9.0.4		Id: 1/1