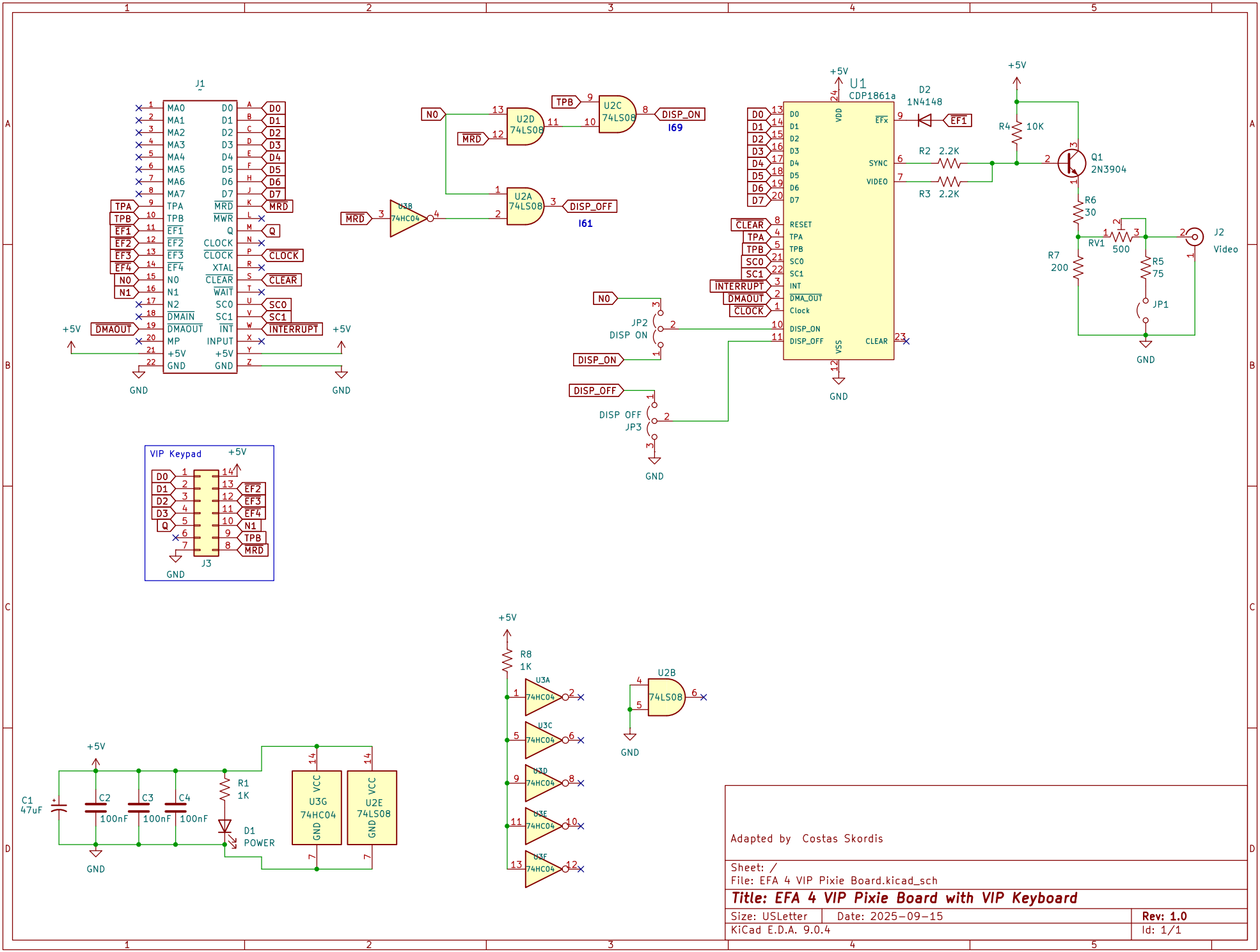

Adapted by Costas Skordis

Sheet: /
File: EFA 4 VIP Pixie Board.kicad_sch

Title: EFA 4 VIP Pixie Board with VIP Keyboard

Size: USLetter	Date: 2025-09-15	Rev: 1.0
KiCad E.D.A. 9.0.4		Id: 1/1