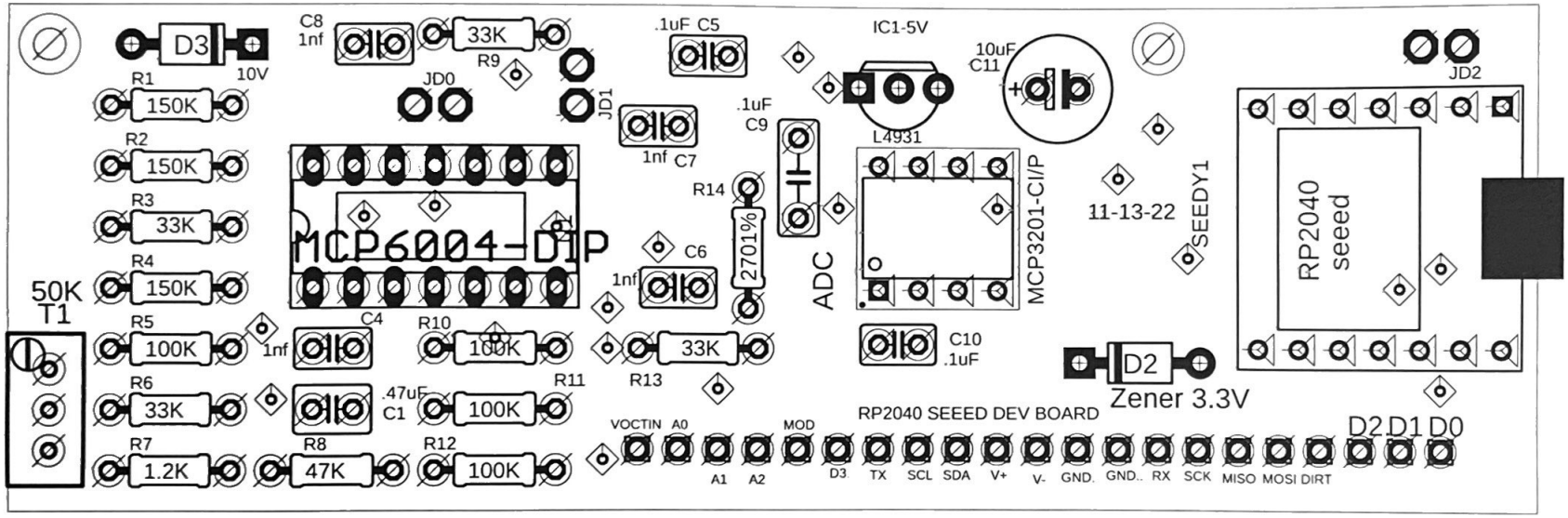
D3
10V
C8
1nf
33K
R9
JD0
JD1
.1uF C5
IC1-5V
10uF
C11
JD2
R1
150K
R2
150K
R3
33K
R4
150K
1nf C7
.1uF
C9
L4931
R14
2701%
MCP6004-DIP
C6
1nf
ADC
MCP3201-CI/P
11-13-22
SEEDY1
RP2040
seeed
50K
T1
R5
100K
C4
1nf
R10
100K
33K
R13
C10
.1uF
D2
Zener 3.3V
R6
33K
.47uF
C1
R11
100K
RP2040 SEEED DEV BOARD
R7
1.2K
R8
47K
R12
100K
VOCTIN
A0
A1
A2
MOD
D3
TX
SCL
SDA
V+
V-
GND
GND
RX
SCK
MISO
MOSI
DIRT
D2
D1
D0

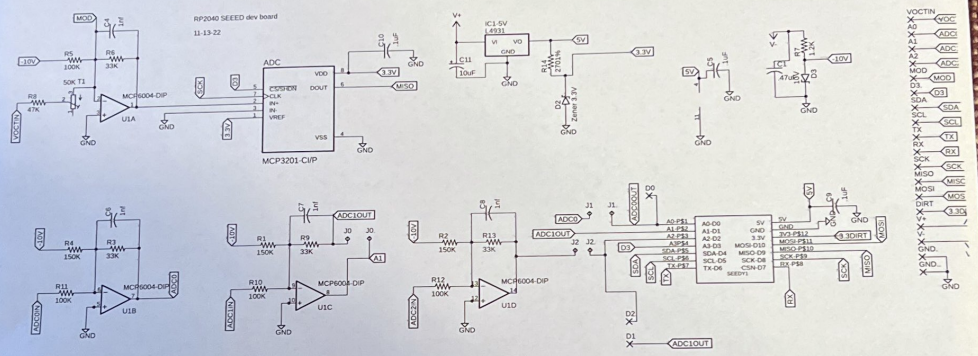
RP2040 SEEED dev board
11-13-22
MCP3201-CI/P
MCP6004-DIP
U1A
U1B
U1C
U1D
IC1-5V
L4931
SEEDY1
VOCTIN
ADC1OUT
ADC0
ADC1IN
3.3V
GND

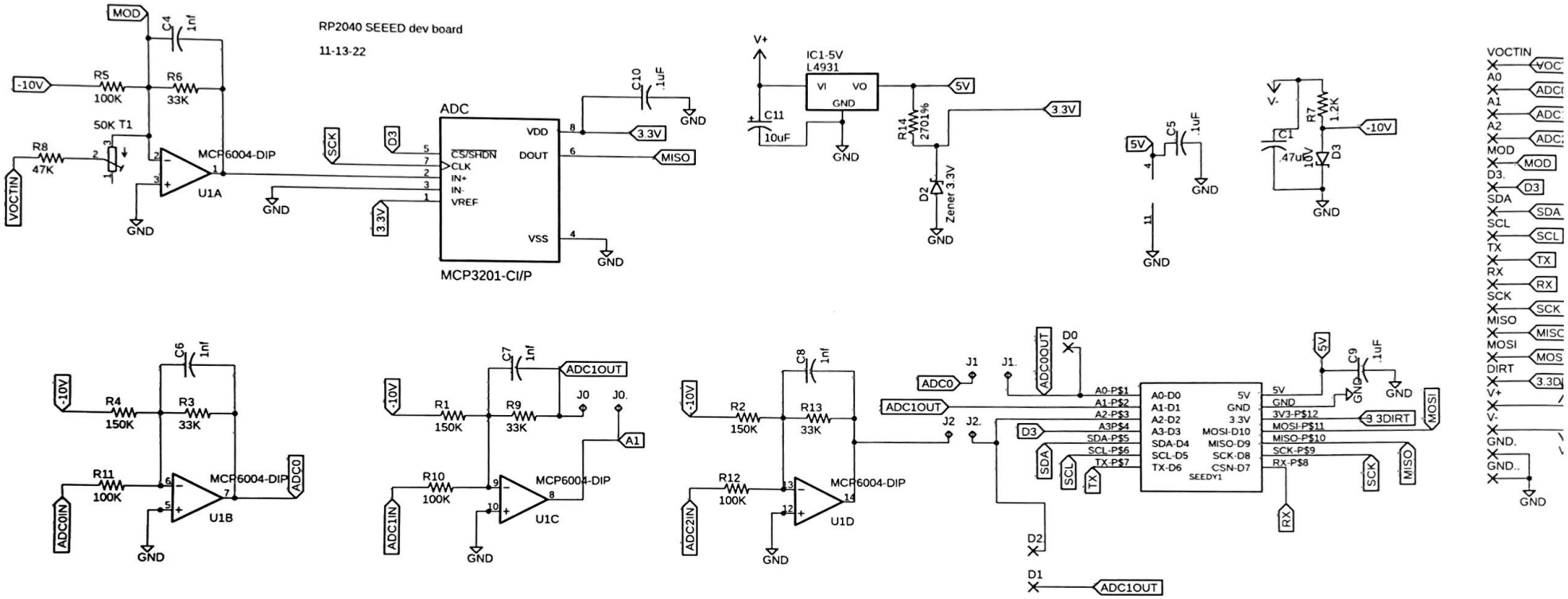
RP2040 SEEED dev board
11-13-22
MOD
C4
1nf
-10V
R5
100K
R6
33K
50K T1
R8
47K
VOCTIN
MCP6004-DIP
U1A
GND
SCK
D3
3.3V
ADC
CS/SHDN
CLK
IN+
IN-
VREF
VDD
DOUT
VSS
MCP3201-CI/P
C10
.1uF
MISO
V+
IC1-5V
L4931
VI
VO
GND
C11
10uF
5V
R14
2701%
D2
Zener 3.3V
C5
.1uF
V-
C1
.47uF
R7
1.2K
10V
D3
R4
150K
R3
33K
R11
100K
ADC0IN
ADC0
U1B
R1
150K
R9
33K
R10
100K
ADC1IN
ADC1OUT
J0
A1
U1C
R2
150K
R13
33K
R12
100K
ADC2IN
U1D
J1
J2
ADC0OUT
D0
D1
A0-P$1
A1-P$2
A2-P$3
A3P$4
SDA-P$5
SCL-P$6
TX-P$7
A0-D0
A1-D1
A2-D2
A3-D3
SDA-D4
SCL-D5
TX-D6
5V
GND
3.3V
MOSI-D10
MISO-D9
SCK-D8
CSN-D7
SEEDY1
3V3-P$12
MOSI-P$11
MISO-P$10
SCK-P$9
RX-P$8
3.3DIRT
MOSI
MISO
SCK
RX
SDA
SCL
TX
C9
.1uF
VOCTIN
A0
A1
A2
MOD
D3.
SDA
SCL
TX
RX
SCK
MISO
MOSI
DIRT
V+
V-
GND.
GND..

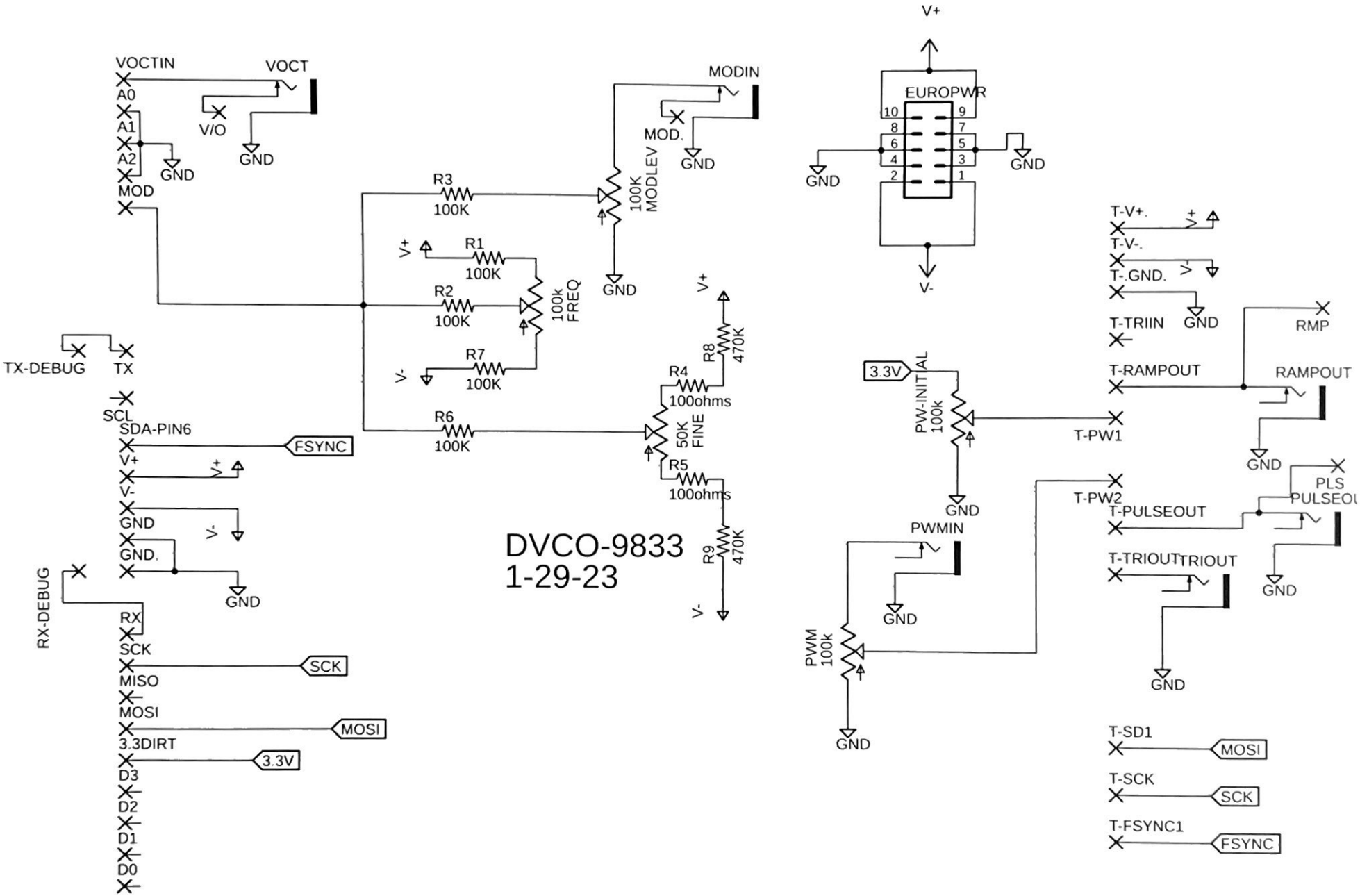
VOCTIN
VOCT
A0
A1
A2
MOD
V/O
GND
MODIN
MOD.
100K
MODLEV
R3
100K
R1
100K
R2
100K
R7
100K
100k
FREQ
V+
V-
R8
470K
R4
100ohms
R6
100K
50K
FINE
R5
100ohms
R9
470K
TX-DEBUG
TX
SCL
SDA-PIN6
FSYNC
V+
V-
GND
GND.
RX-DEBUG
RX
SCK
MISO
MOSI
3.3DIRT
D3
D2
D1
D0
DVCO-9833
1-29-23
EUROPWR
10
9
8
7
6
5
4
3
2
1
T-V+.
T-V-.
T-.GND.
T-TRIIN
RMP
T-RAMPOUT
RAMPOUT
3.3V
PW-INITIAL
100k
T-PW1
T-PW2
PWMIN
PWM
100k
T-PULSEOUT
PLS
PULSEOUT
T-TRIOUT
TRIOUT
T-SD1
T-SCK
T-FSYNC1

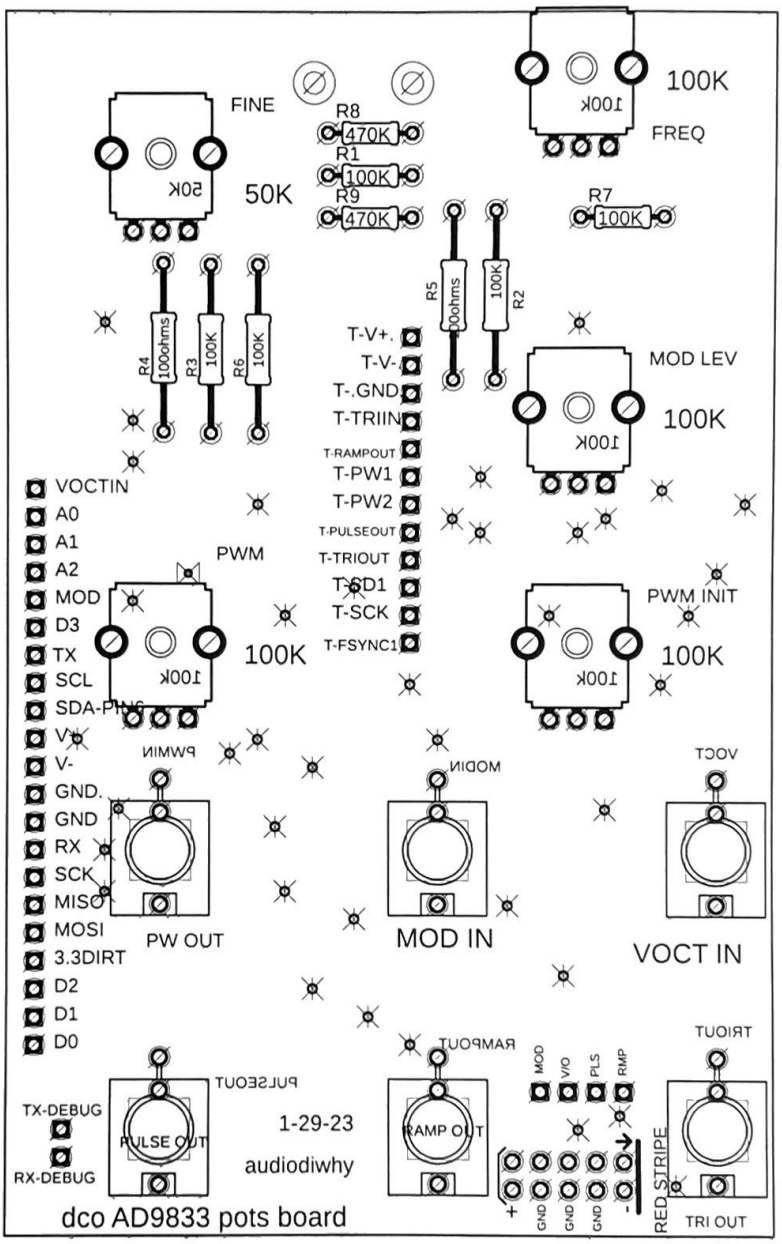
FINE
50K
R8
470K
R1
100K
R9
470K
100K
FREQ
R7
100K
R4
100ohms
R3
100K
R6
100K
R5
100ohms
R2
100K
T-V+.
T-V-.
T-.GND
T-TRIIN
T-RAMPOUT
T-PW1
T-PW2
T-PULSEOUT
T-TRIOUT
T-SD1
T-SCK
T-FSYNC1
MOD LEV
100K
VOCTIN
A0
A1
A2
MOD
D3
TX
SCL
SDA-PWS
V+
V-
GND.
GND
RX
SCK
MISO
MOSI
3.3DIRT
D2
D1
D0
PWM
100K
PWM INIT
100K
PWMIN
MODIN
VOCT
PW OUT
MOD IN
VOCT IN
PULSEOUT
RAMPOUT
TRIOUT
MOD
VIO
PLS
RMP
TX-DEBUG
RX-DEBUG
PULSE OUT
1-29-23
audiodiwhy
RAMP OUT
+
GND
GND
GND
-
RED STRIPE
TRI OUT
dco AD9833 pots board

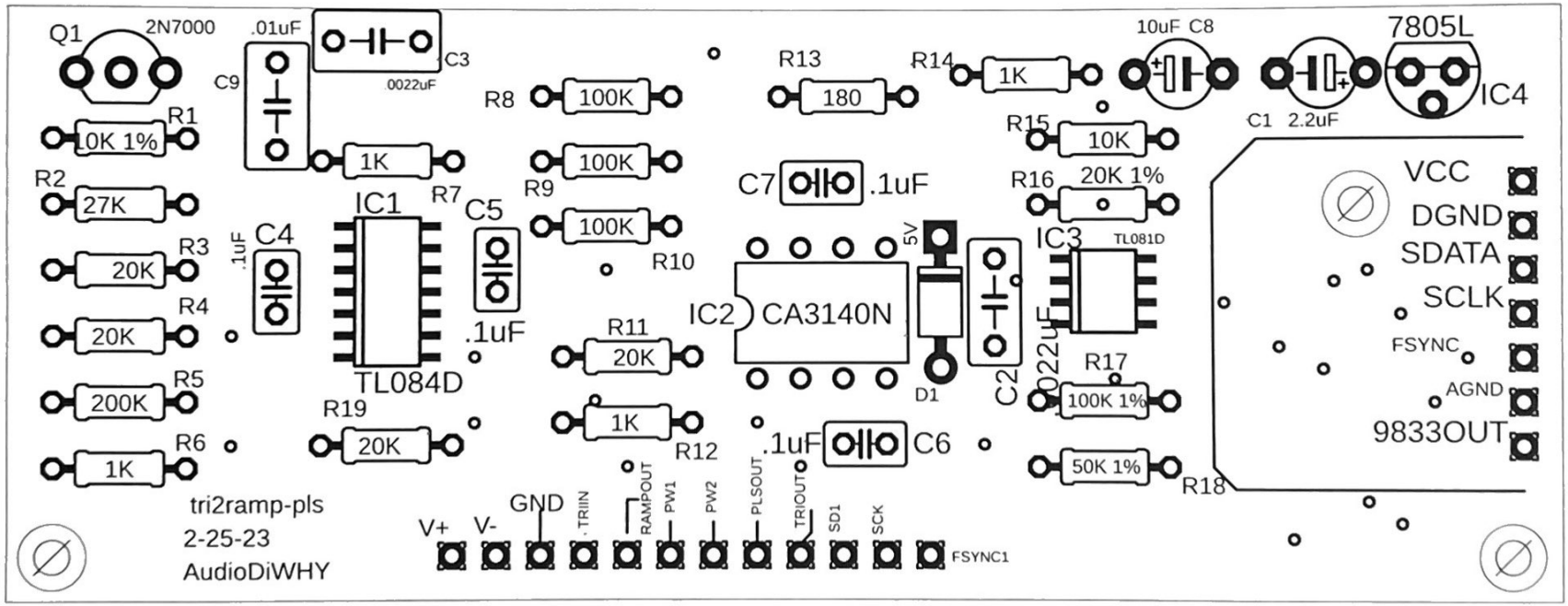
Q1
2N7000
.01uF
C3
.0022uF
C9
R1
10K 1%
R2
27K
R3
20K
R4
20K
R5
200K
R6
1K
C4
.1uF
IC1
TL084D
R7
1K
C5
.1uF
R19
20K
R8
100K
R9
100K
100K
R10
R11
20K
1K
R12
R13
180
R14
1K
10uF C8
C1 2.2uF
7805L
IC4
R15
10K
R16
20K 1%
C7
.1uF
IC2
CA3140N
5V
D1
C2
.022uF
IC3
TL081D
R17
100K 1%
R18
50K 1%
.1uF
C6
VCC
DGND
SDATA
SCLK
FSYNC
AGND
9833OUT
tri2ramp-pls
2-25-23
AudioDiWHY
V+
V-
GND
TRIIN
RAMPOUT
PW1
PW2
PLSOUT
TRIOUT
SD1
SCK
FSYNC1

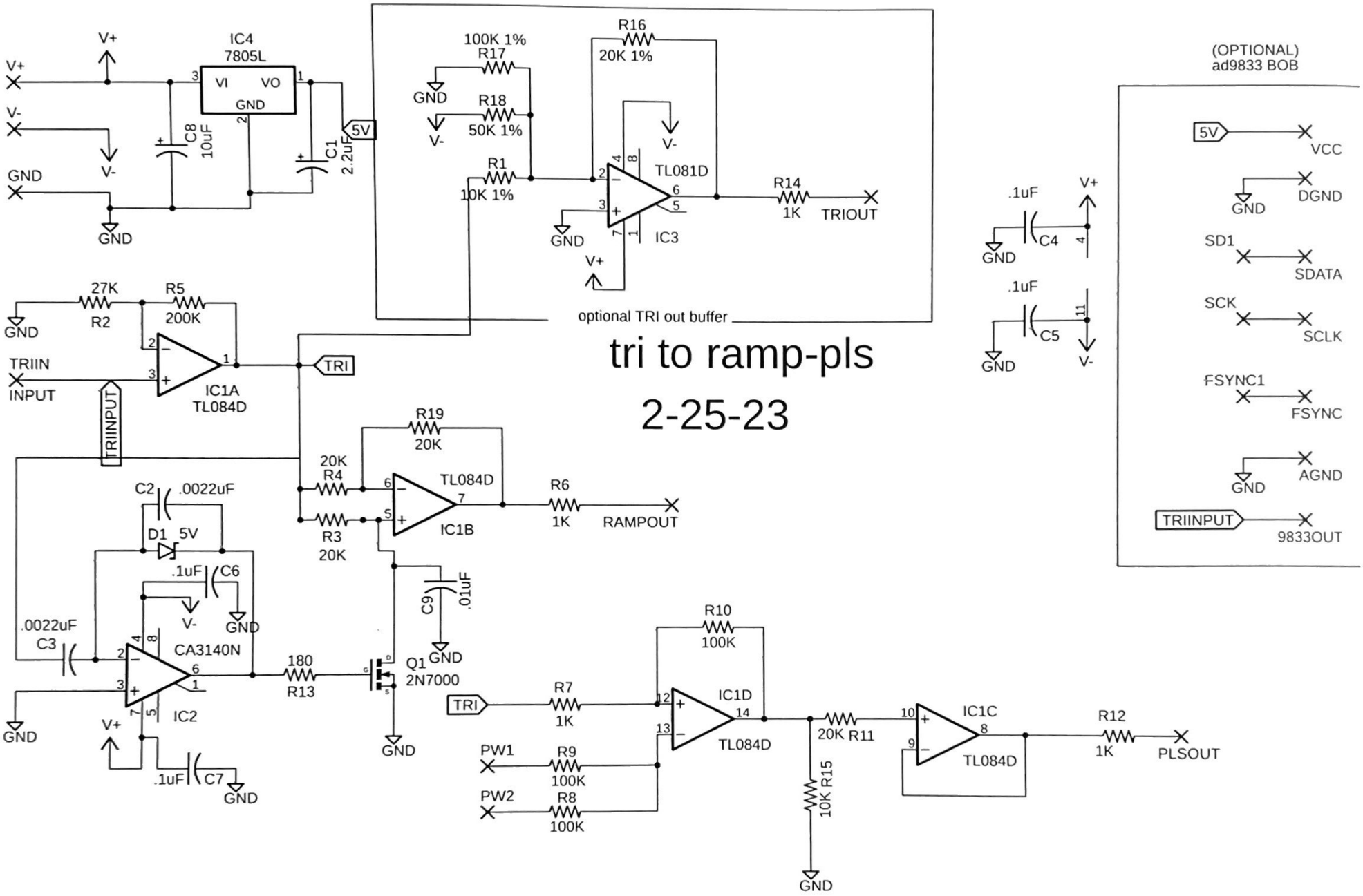
tri to ramp-pls
2-25-23
IC4
7805L
VI
VO
GND
V+
V-
GND
C8
10uF
C1
2.2uF
5V
100K 1%
R17
R18
50K 1%
R16
20K 1%
R1
10K 1%
TL081D
IC3
R14
1K
TRIOUT
optional TRI out buffer
.1uF
C4
C5
(OPTIONAL)
ad9833 BOB
VCC
DGND
SD1
SDATA
SCK
SCLK
FSYNC1
FSYNC
AGND
TRIINPUT
9833OUT
27K
R2
R5
200K
TRIIN
INPUT
IC1A
TL084D
TRI
R19
20K
20K
R4
R3
20K
TL084D
IC1B
R6
1K
RAMPOUT
C2
.0022uF
D1
5V
.1uF
C6
.0022uF
C3
CA3140N
IC2
.1uF
C7
180
R13
Q1
2N7000
C9
.01uF
R10
100K
R7
1K
IC1D
TL084D
PW1
R9
100K
PW2
R8
100K
20K R11
10K R15
IC1C
TL084D
R12
1K
PLSOUT

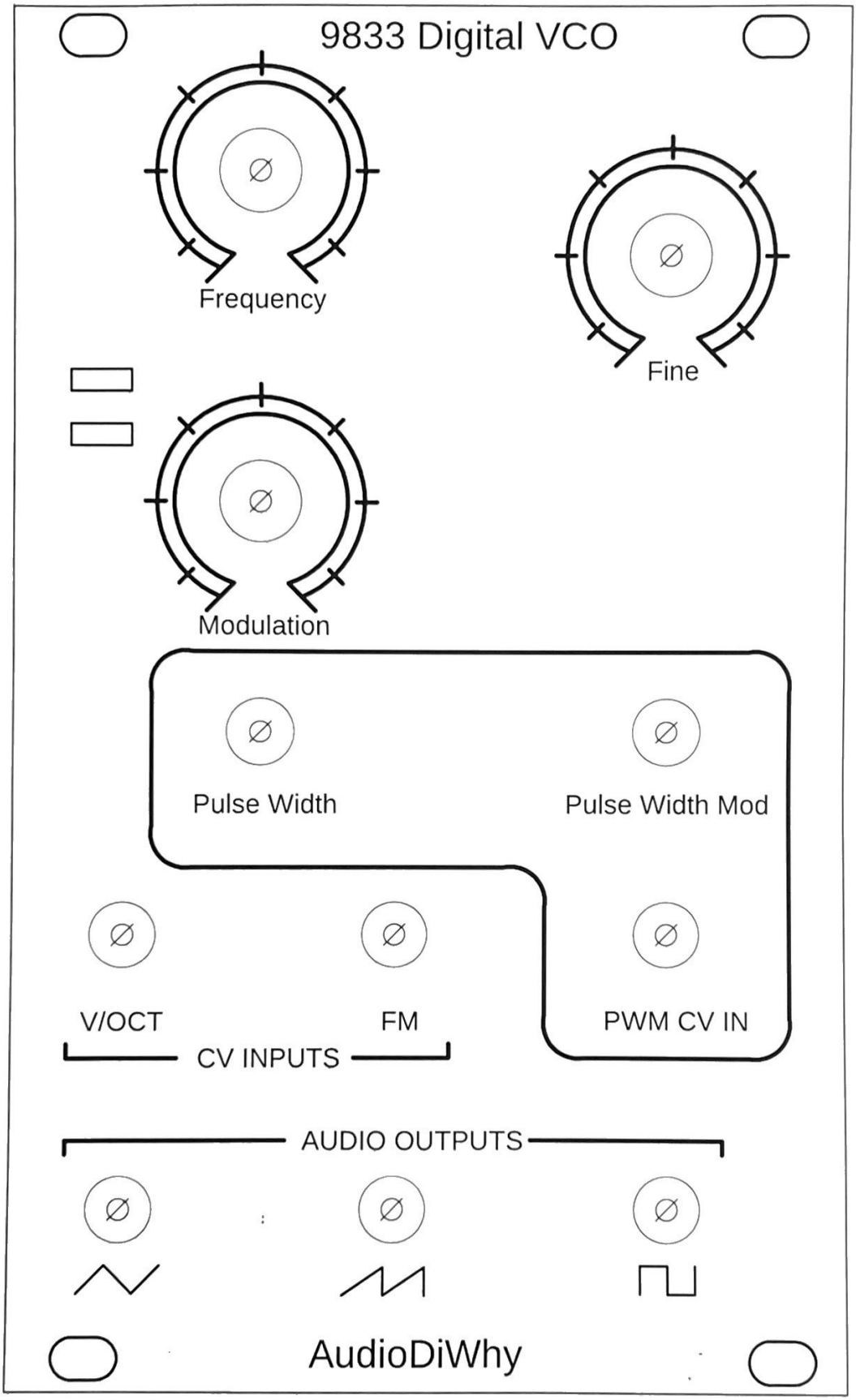
9833 Digital VCO
Frequency
Fine
Modulation
Pulse Width
Pulse Width Mod
V/OCT
FM
PWM CV IN
CV INPUTS
AUDIO OUTPUTS
AudioDiWhy