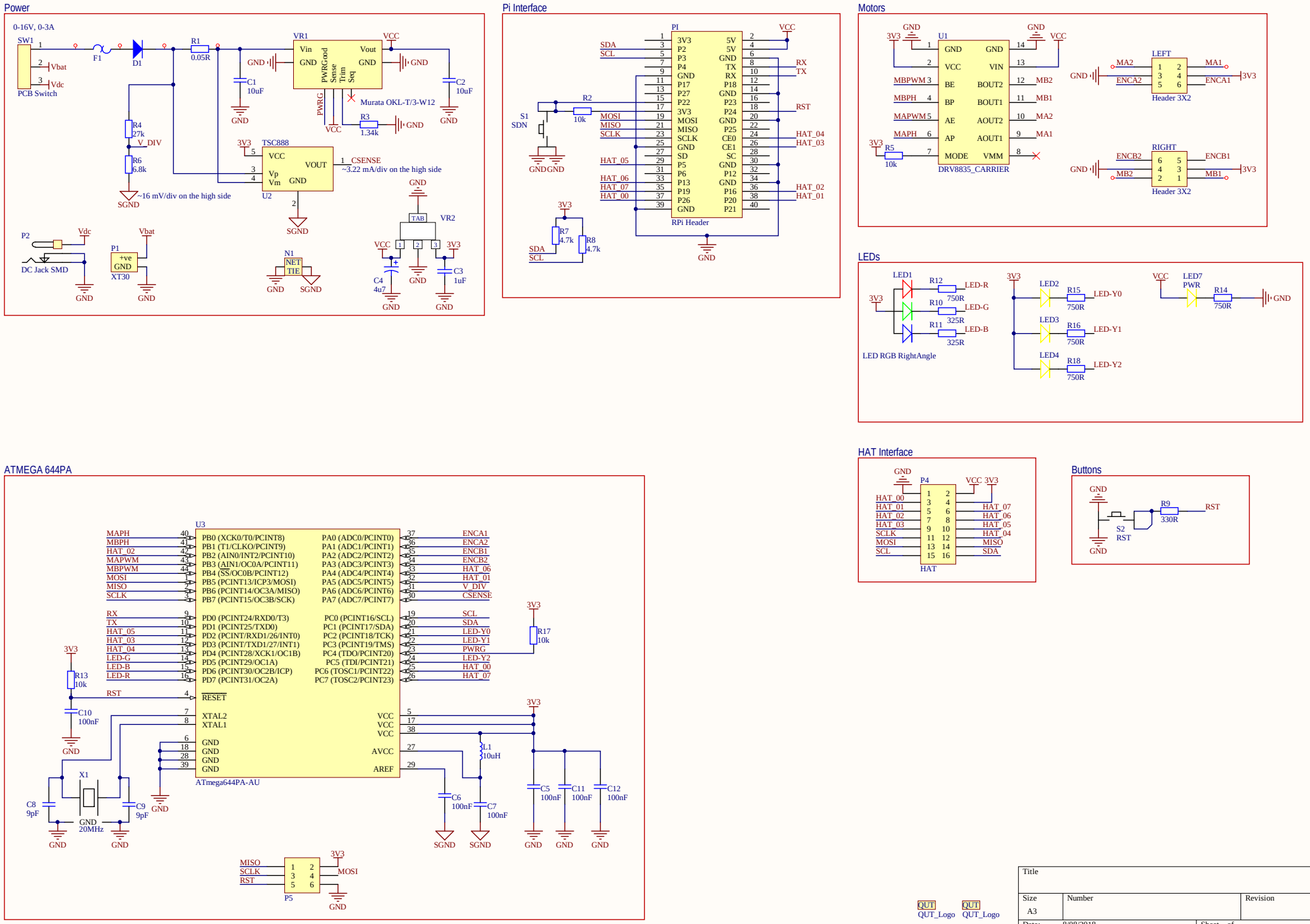
Power
0-16V, 0-3A
SW1
PCB Switch
Vbat
Vdc
F1
D1
R1
0.05R
VR1
Vin
GND
Vout
GND
PWRGood
Sense
Trim
Seq
VCC
GND
C1
10uF
C2
10uF
Murata OKL-T/3-W12
PWRG
R3
1.34k
R4
27k
V_DIV
R6
6.8k
~16 mV/div on the high side
SGND
3V3
TSC888
VCC
VOUT
Vp
Vm
GND
U2
CSENSE
~3.22 mA/div on the high side
P2
DC Jack SMD
P1
+ve
GND
XT30
N1
NET
TIE
VR2
TAB
C4
4u7
C3
1uF
Pi Interface
PI
RPi Header
S1
SDN
R2
10k
R7
4.7k
R8
4.7k
SDA
SCL
MOSI
MISO
SCLK
HAT_05
HAT_06
HAT_07
HAT_00
RX
TX
RST
HAT_04
HAT_03
HAT_02
HAT_01
Motors
U1
DRV8835_CARRIER
MBPWM
MBPH
MAPWM
MAPH
R5
10k
MB2
MB1
MA2
MA1
LEFT
Header 3X2
RIGHT
ENCA2
ENCA1
ENCB2
ENCB1
LEDs
LED1
LED RGB RightAngle
R12
750R
LED-R
R10
325R
LED-G
R11
325R
LED-B
LED2
R15
750R
LED-Y0
LED3
R16
750R
LED-Y1
LED4
R18
750R
LED-Y2
LED7
PWR
R14
750R
HAT Interface
P4
HAT
Buttons
S2
RST
R9
330R
ATMEGA 644PA
U3
ATmega644PA-AU
PB0 (XCK0/T0/PCINT8)
PB1 (T1/CLKO/PCINT9)
PB2 (AIN0/INT2/PCINT10)
PB3 (AIN1/OC0A/PCINT11)
PB4 (SS/OC0B/PCINT12)
PB5 (PCINT13/ICP3/MOSI)
PB6 (PCINT14/OC3A/MISO)
PB7 (PCINT15/OC3B/SCK)
PD0 (PCINT24/RXD0/T3)
PD1 (PCINT25/TXD0)
PD2 (PCINT/RXD1/26/INT0)
PD3 (PCINT/TXD1/27/INT1)
PD4 (PCINT28/XCK1/OC1B)
PD5 (PCINT29/OC1A)
PD6 (PCINT30/OC2B/ICP)
PD7 (PCINT31/OC2A)
RESET
XTAL2
XTAL1
GND
PA0 (ADC0/PCINT0)
PA1 (ADC1/PCINT1)
PA2 (ADC2/PCINT2)
PA3 (ADC3/PCINT3)
PA4 (ADC4/PCINT4)
PA5 (ADC5/PCINT5)
PA6 (ADC6/PCINT6)
PA7 (ADC7/PCINT7)
PC0 (PCINT16/SCL)
PC1 (PCINT17/SDA)
PC2 (PCINT18/TCK)
PC3 (PCINT19/TMS)
PC4 (TDO/PCINT20)
PC5 (TDI/PCINT21)
PC6 (TOSC1/PCINT22)
PC7 (TOSC2/PCINT23)
VCC
AVCC
AREF
ENCA1
ENCA2
ENCB1
ENCB2
HAT_06
HAT_01
V_DIV
CSENSE
SCL
SDA
LED-Y0
LED-Y1
PWRG
LED-Y2
HAT_00
HAT_07
R17
10k
R13
10k
C10
100nF
X1
20MHz
C8
9pF
C9
9pF
L1
10uH
C6
100nF
C7
100nF
C5
100nF
C11
100nF
C12
100nF
P5
MISO
SCLK
RST
MOSI
QUT
QUT_Logo
Title
Size
A3
Number
Revision
Date:
8/08/2018
Sheet of
File:
T:\Techs\..\PenguinPi.SchDoc
Drawn By:

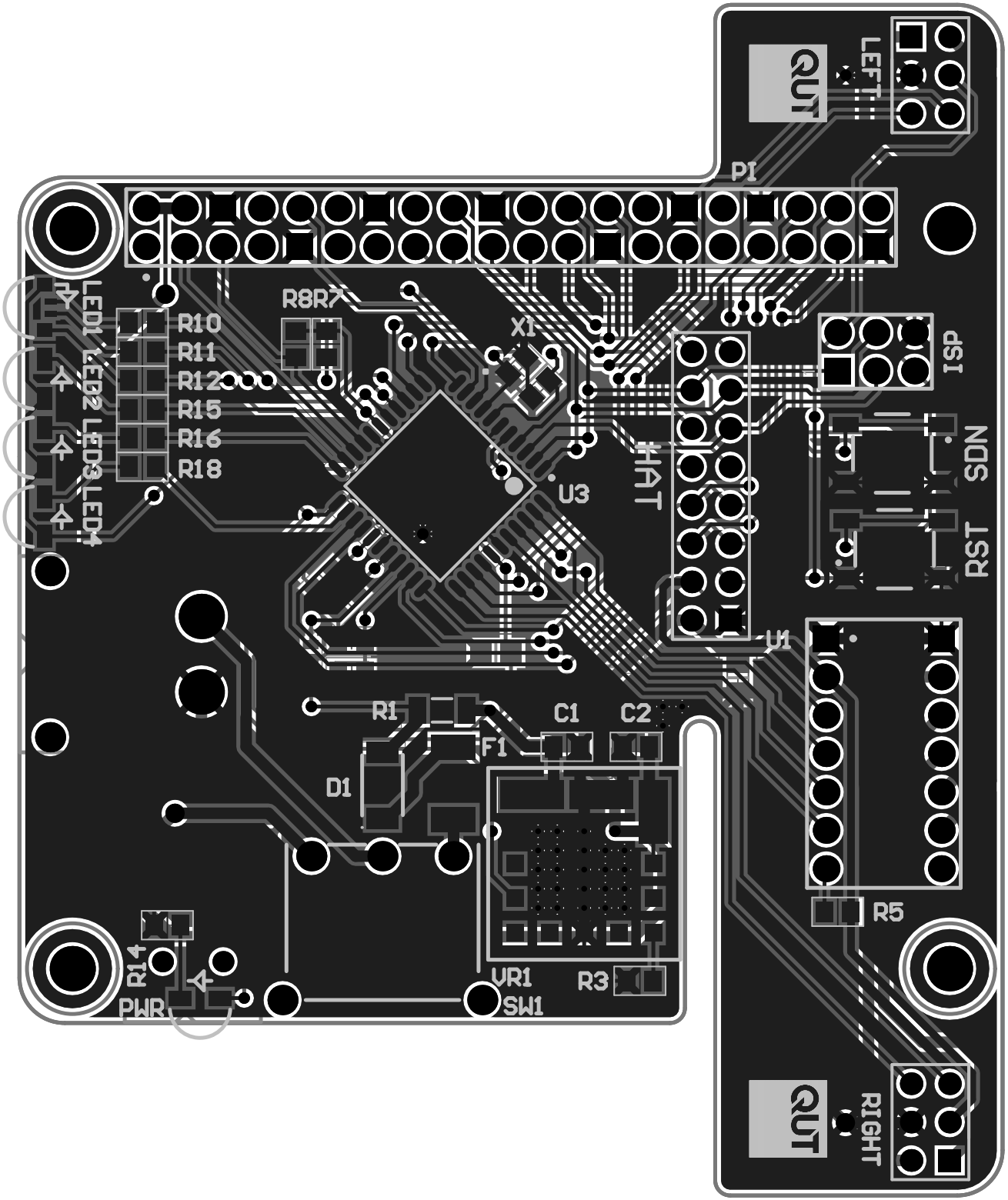
QUT
LEFT
P1
R8R7
X1
ISP
R10
R11
R12
R15
R16
R18
LED1
LED2
LED3
LED4
U3
HAT
SDN
RST
U1
R1
C1
C2
F1
D1
R5
R14
PWR
VR1
SW1
R3
QUT
RIGHT