xv6©-rev10

(Copyright Frans Kaashoek, Robert Morris, and Russ Cox.)

Initialization, Kernel Mapping

Carmi Merimovich

Tel-Aviv Academic College

September 27, 2017

Context

```
kinit1(end, P2V(4*1024*1024)); // phys page alloca
kvmalloc();          // kernel page table
   ⋮
seginit();           // set up segments
   ⋮
pinit();             // process table
   ⋮
   ⋮
kinit2(P2V(4*1024*1024), P2V(PHYSTOP)); // must co
userinit();          // first user process
mpmain();
```

Memory access after paging enabled

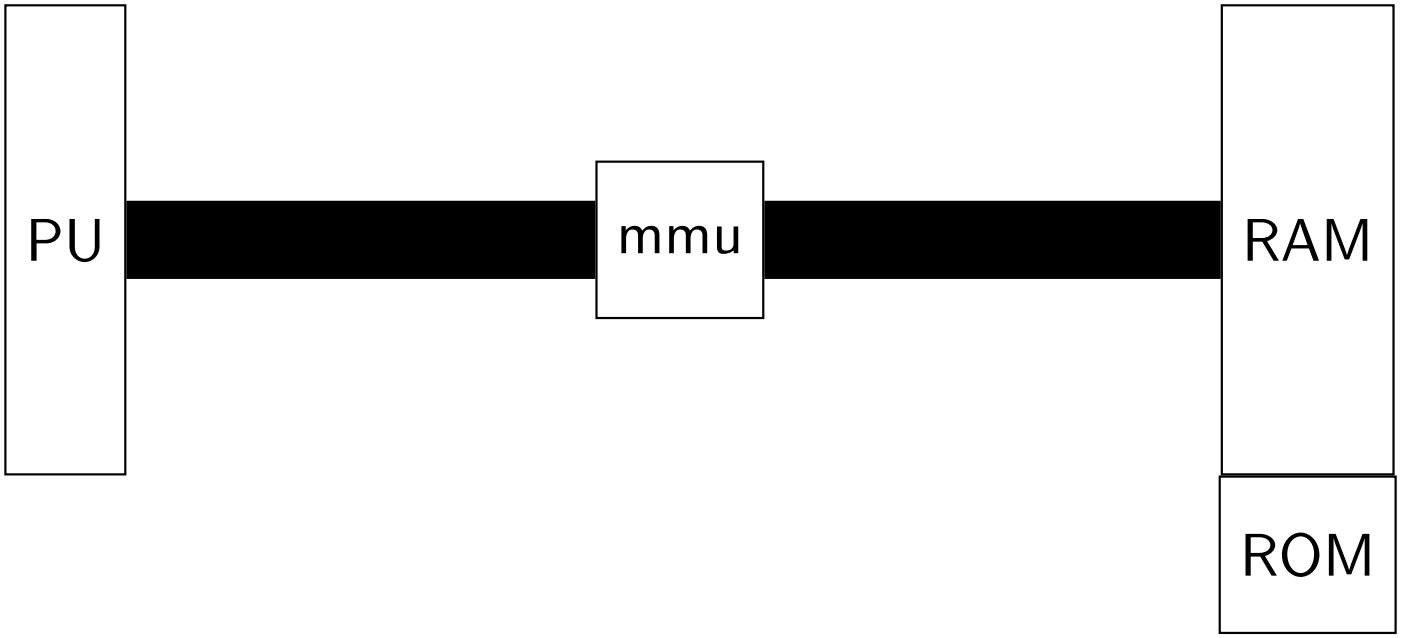

- The MMU can generate only physical addresses.
- The processor can generate only virtual addresses.
- If we (program) need to access physical address we must attach a virtual address for it.

kernel static/dynamic mapping

- Static mapping (used by xv6):

> All physical pages ever accessed by the kernel get virtual addresses on initialization.

- Dynamic mapping:

> When a physical page is needed a mapping rule for it is added. When the page is no more needed, the rule is removed.

Static vs. Dynamic mapping

	static	dynamic
Coding	simple	less simple
Size	Restricted	unlimited

- The virtual address range reserved for xv6 is [0x80000000,0xFFFFFFFF).
- Hence xv6 cannot use more than 2GB of physical memory!
- (Somewhat less than that, really).
- It does not matter how large is the RAM installed in a system.

kvmalloc prerequisites

- **setupkvm**.
  - **mappages**.
    - **walkpgdir**.
- **switchkvm**.

setupkvm: xv6 static mapping

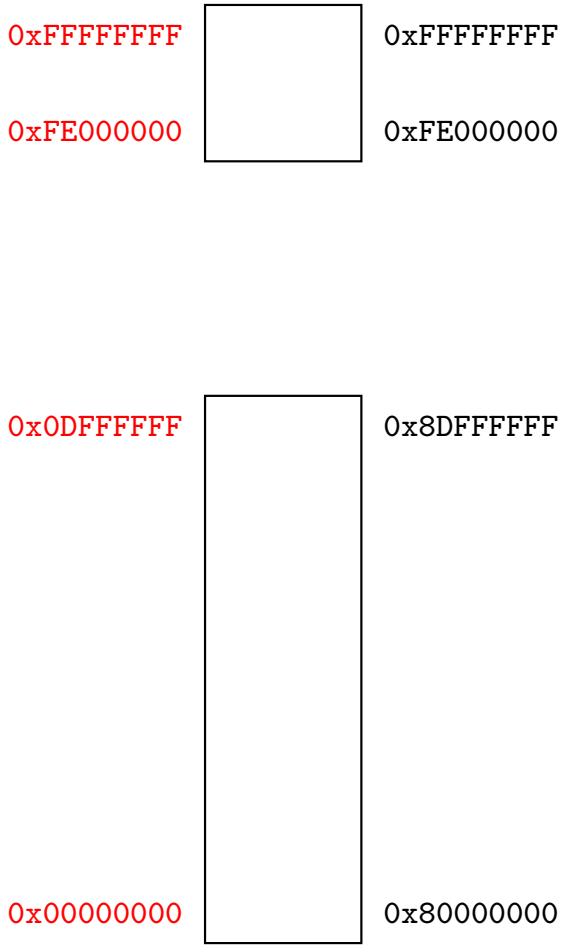


```
#define KERNBASE 0x80000000

static inline uint v2p(void *a)
 {return ((uint) (a)) - KERNBASE;}

static inline void *p2v(uint a)
 {return (void *)((a) + KERNBASE);}

0x8000000 <= va < 0xFE000000
pa = v2p(va);

0 <= pa < 0x7E000000
va = p2v(pa);
```

setupkvm: xv6 static mapping

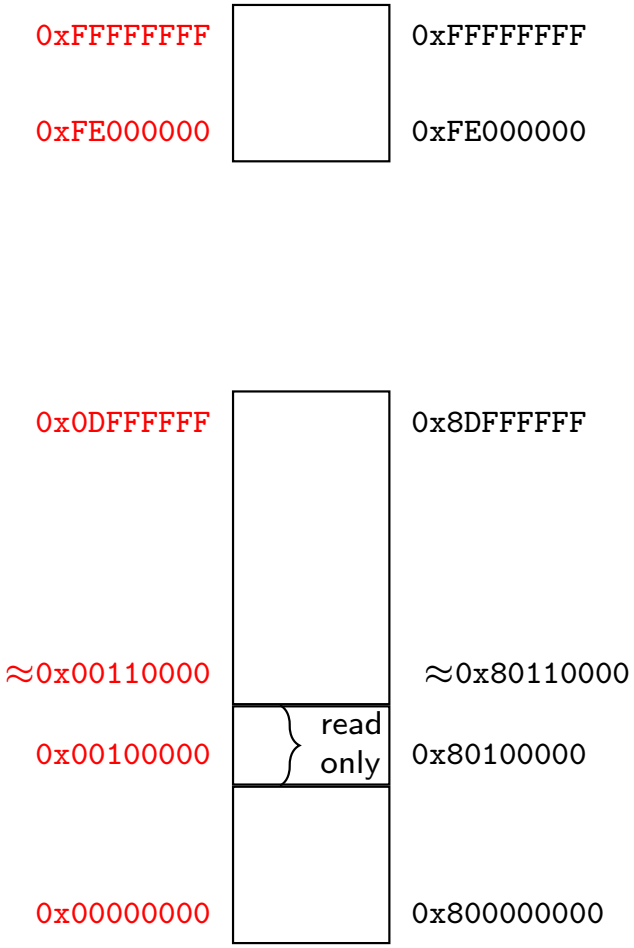


```
#define KERNBASE 0x80000000

static inline uint v2p(void *a)
 {return ((uint) (a)) - KERNBASE;}

static inline void *p2v(uint a)
 {return (void *)((a) + KERNBASE);}

0x8000000 <= va < 0xFE000000
pa = v2p(va);

0 <= pa < 0x7E000000
va = p2v(pa);
```

setupkvm: xv6 static mapping

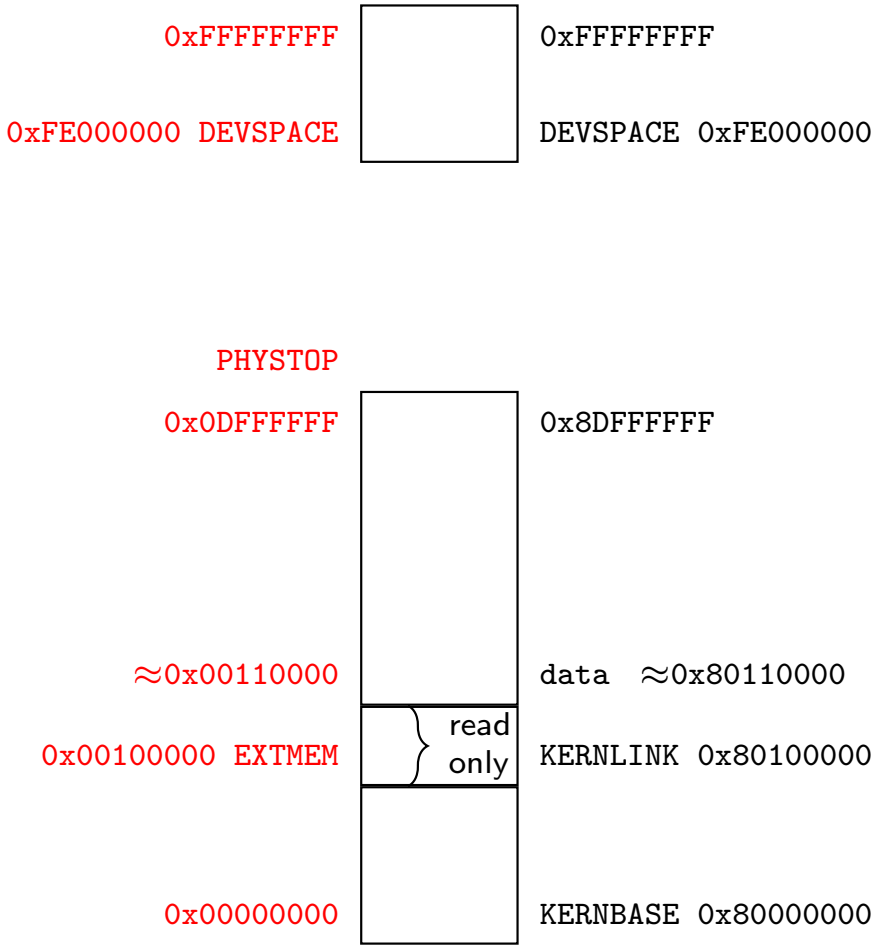

setupkvm: xv6 static mapping

setupkvm: ranges

```
1804 static struct kmap {
      void *virt;
      uint phys_start;
      uint phys_end;
      int  perm;
     } kmap[] = {
     {(void*)KERNBASE, 0,                 EXTMEM,    PTE_W},
     {(void*)KERNLINK, V2P(KERNLINK), V2P(data), 0}, // k
     {(void*)data,     V2P(data),     PHYSTOP,   PTE_W},
     {(void*)DEVSPACE, DEVSPACE,      0,         PTE_W},
     };
```

setupkvm

```
1817 pde_t *setupkvm(void) {
      pde_t *pgdir;
      struct kmap *k;

      if ((pgdir = (pde_t*)kalloc()) == 0)
       return 0;
      memset(pgdir, 0, PGSIZE);
      for(k = kmap; k < &kmap[NELEM(kmap)]; k++)
       if (mappages(pgdir, k->virt,
                    k->phys_end - k->phys_start,
           (uint)k->phys_start, k->perm) < 0) {
        freevm(pgdir);
        return 0;
      }
      return pgdir;
    }
```

walkpgdir

- Basic paging handling routine.
- Arguments: pgdir, va, alloc.
- Returns the **address** of the page table entry which would have been used to translate the virtual address va if **cr3** would have pointed to the table pgdir.
- If the relevant internal table is missing it returns 0.
- However, if alloc is not zero, an internal table is allocated, if necessary.

Ex 1: **walkpgdir** when internal table exists

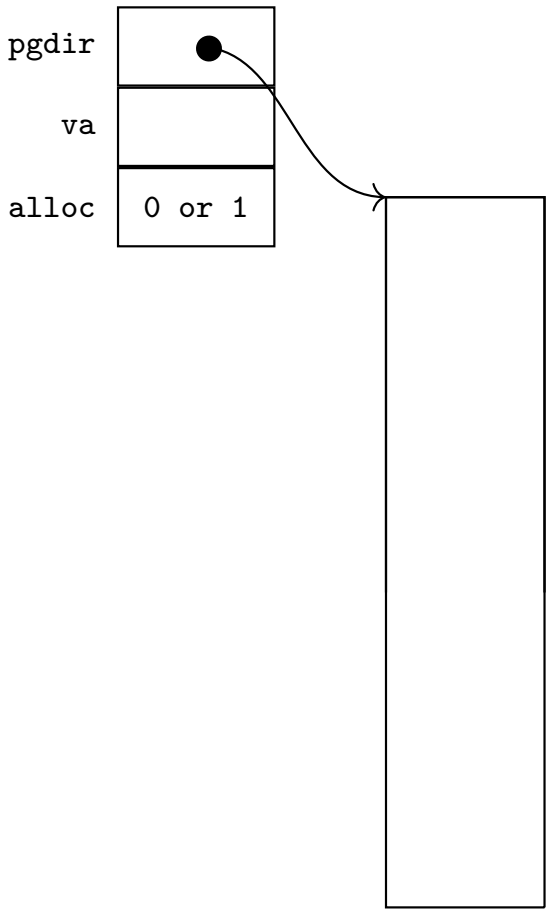

Ex 1: **walkpgdir** when internal table exists

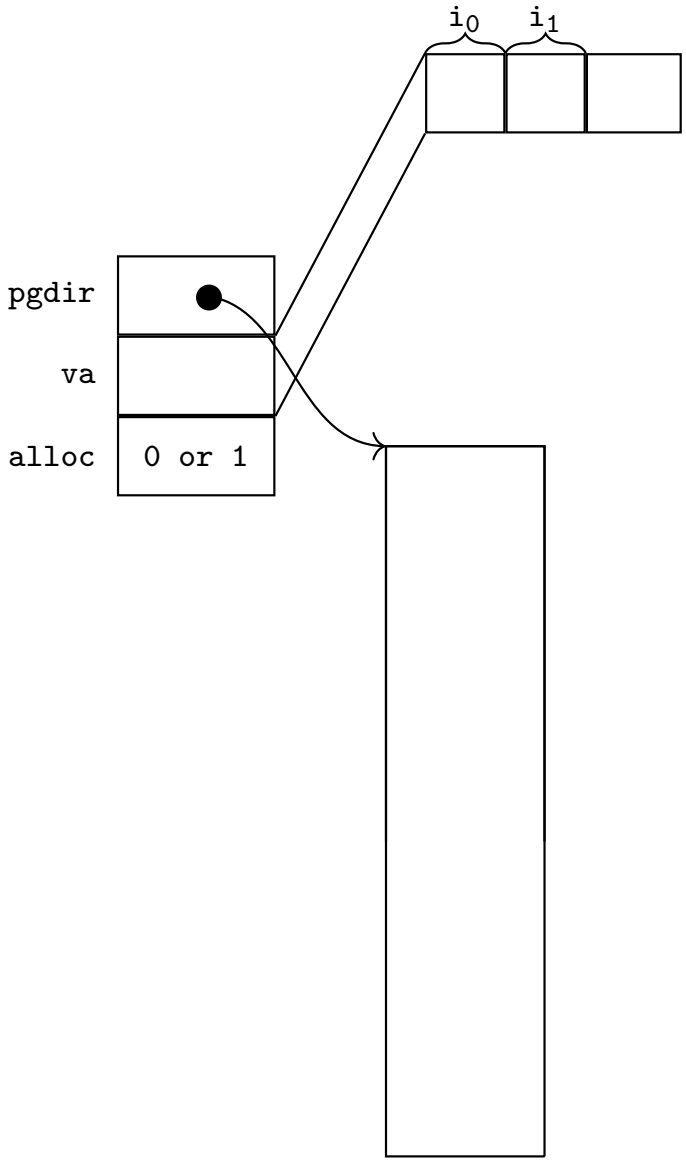

Ex 1: **walkpgdir** when internal table exists

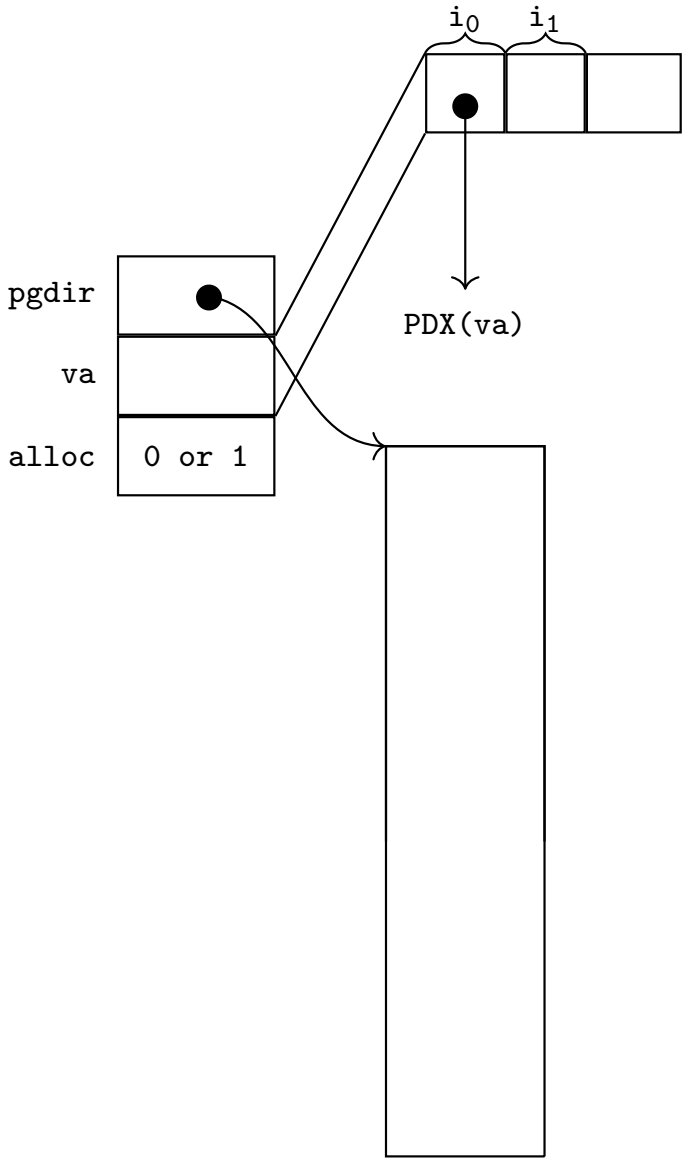

Ex 1: **walkpgdir** when internal table exists

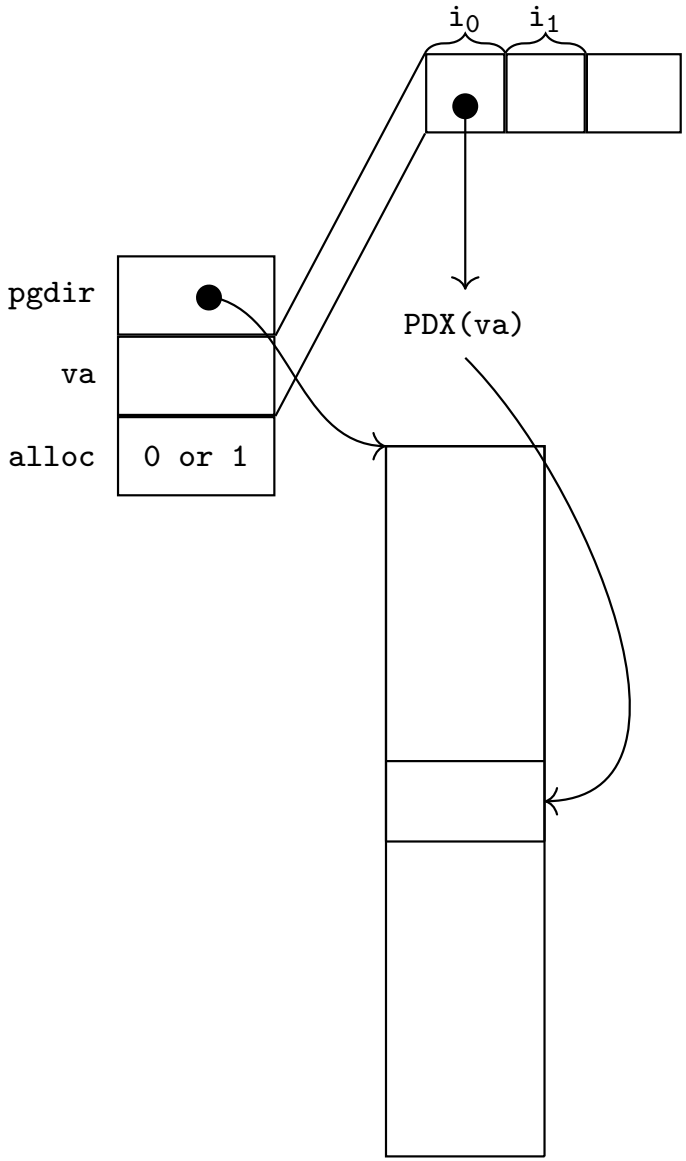

Ex 1: **walkpgdir** when internal table exists

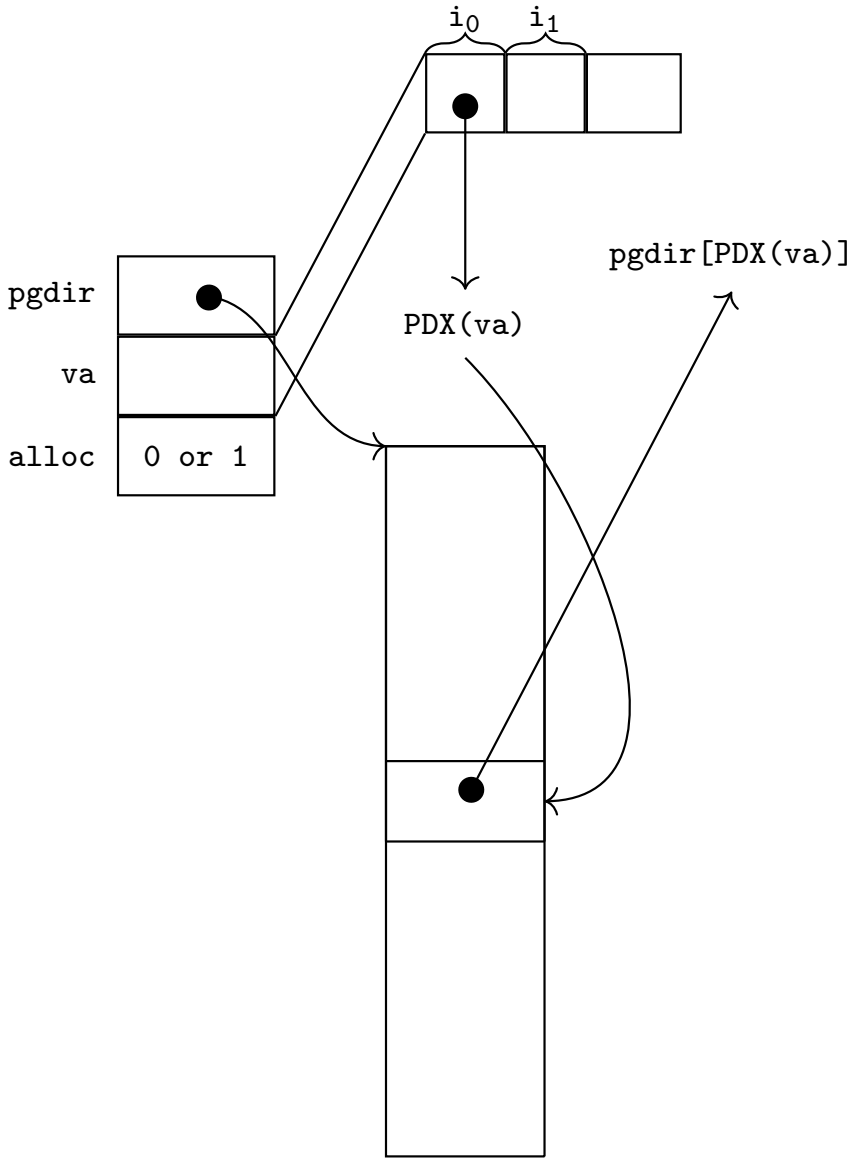

Ex 1: **walkpgdir** when internal table exists

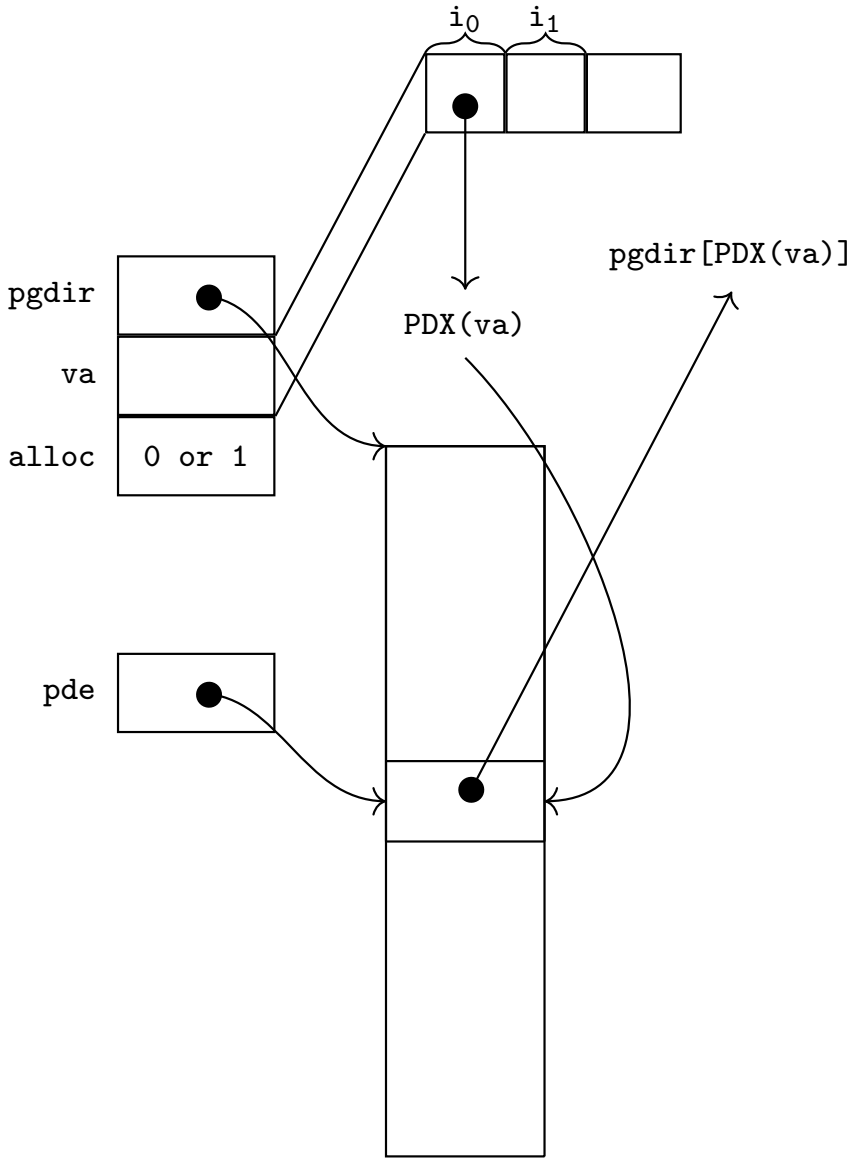

Ex 1: **walkpgdir** when internal table exists

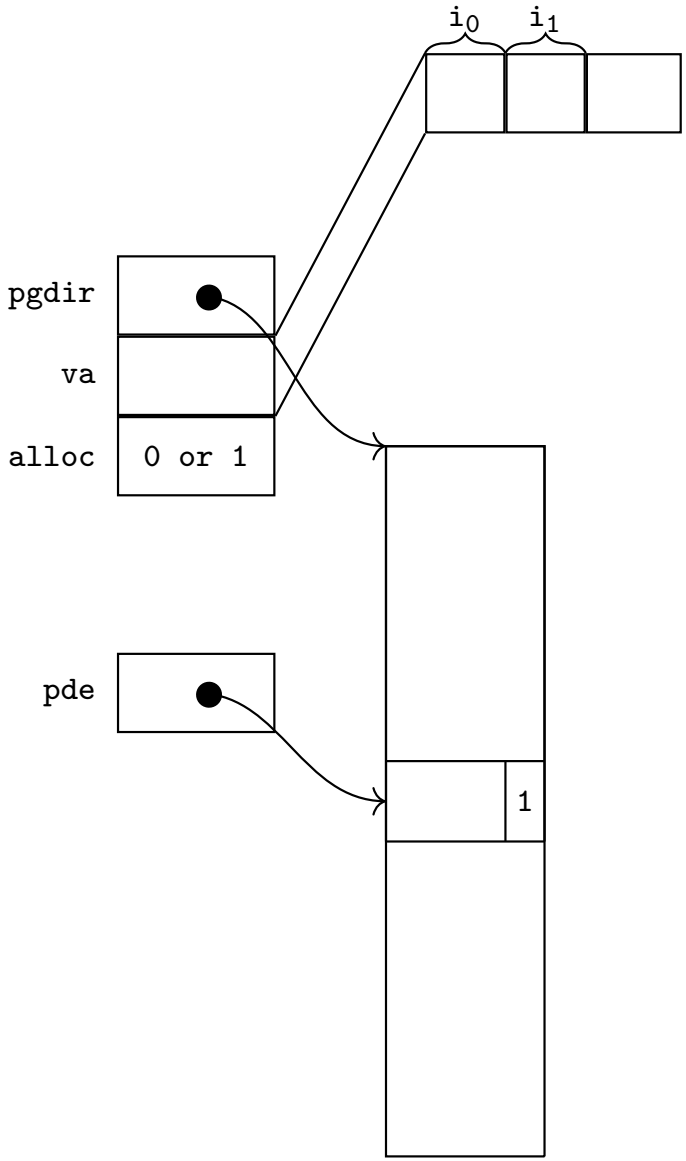

Ex 1: **walkpgdir** when internal table exists

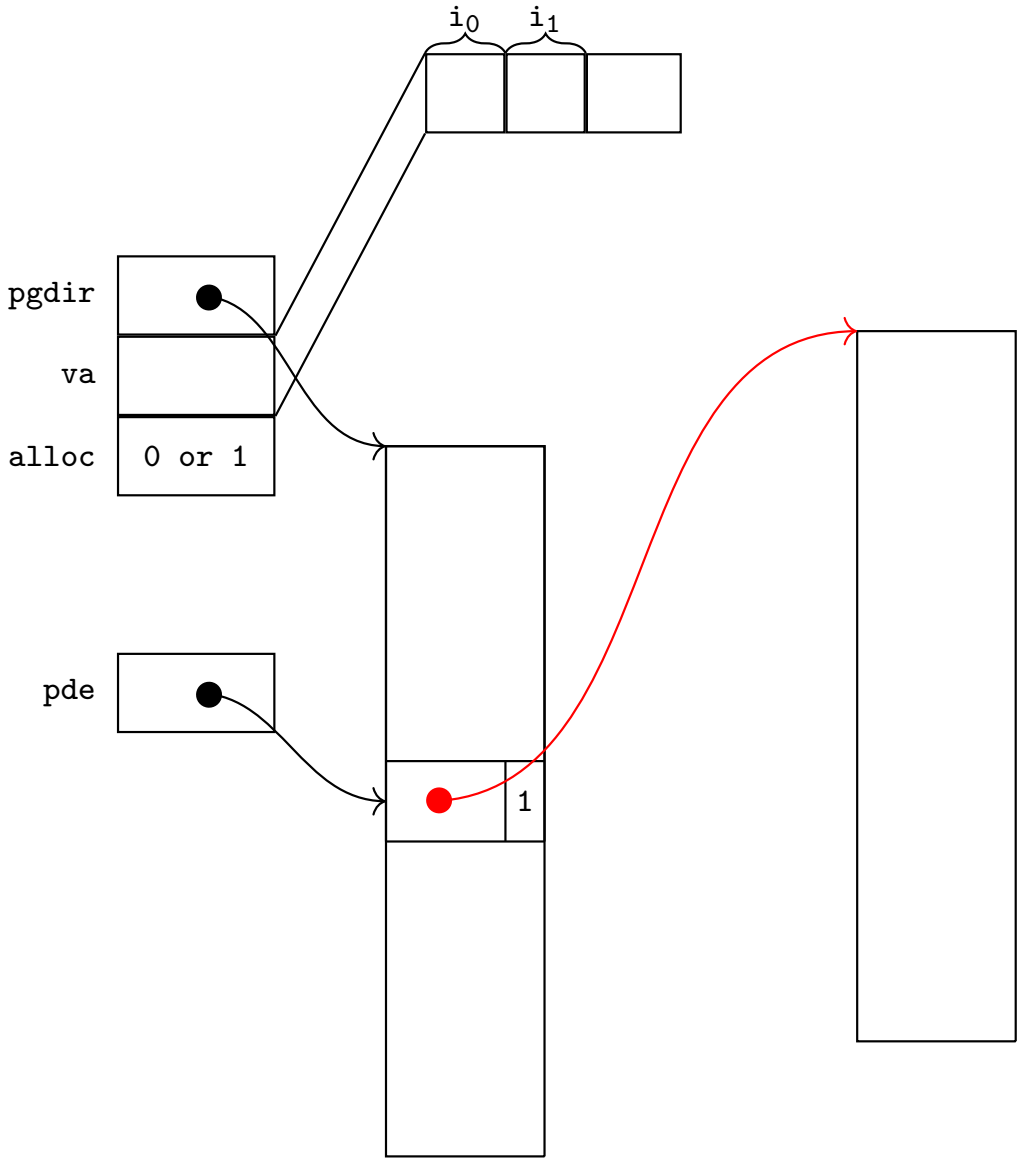

Ex 1: **walkpgdir** when internal table exists

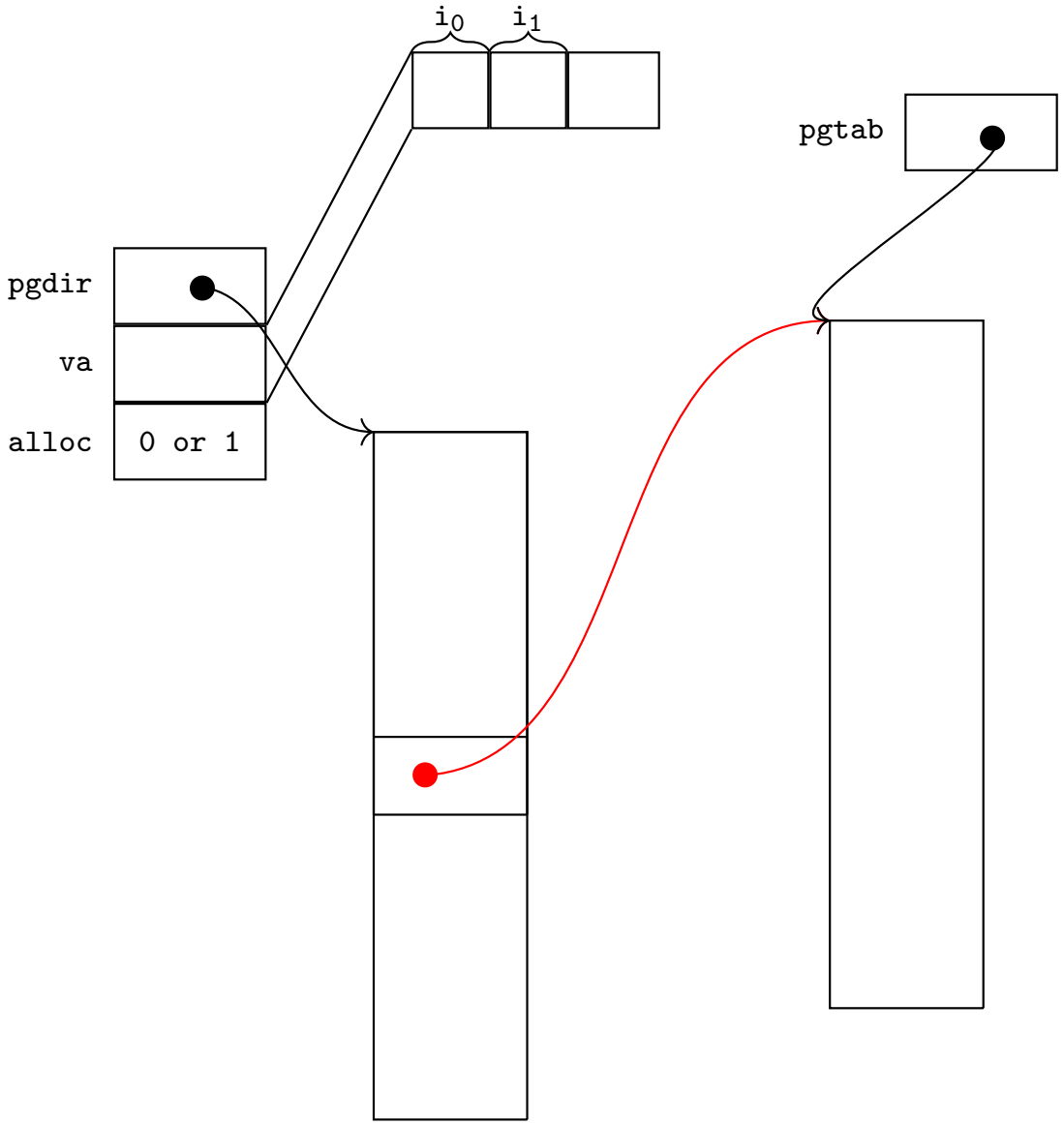

Ex 1: **walkpgdir** when internal table exists

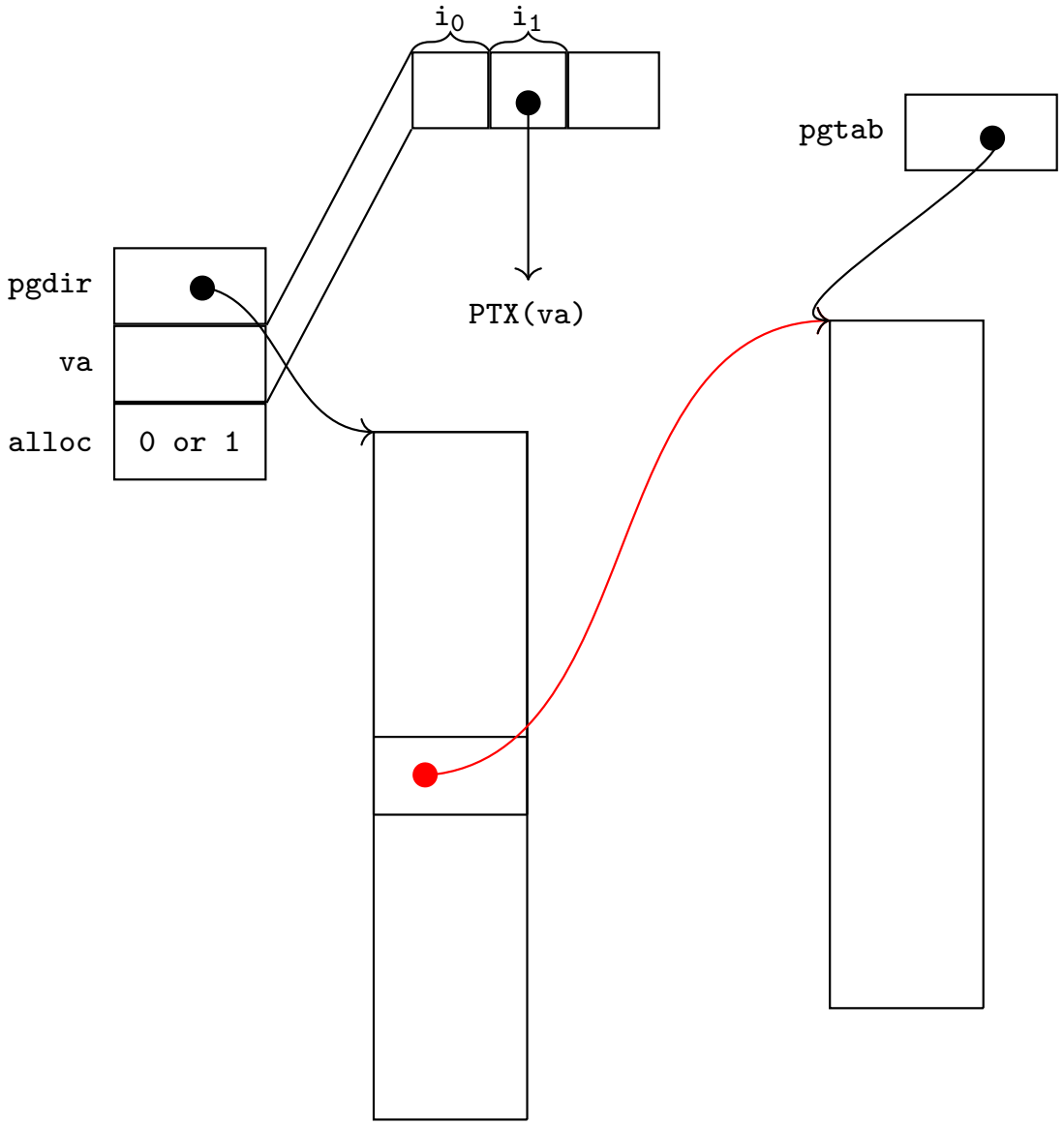

Ex 1: **walkpgdir** when internal table exists

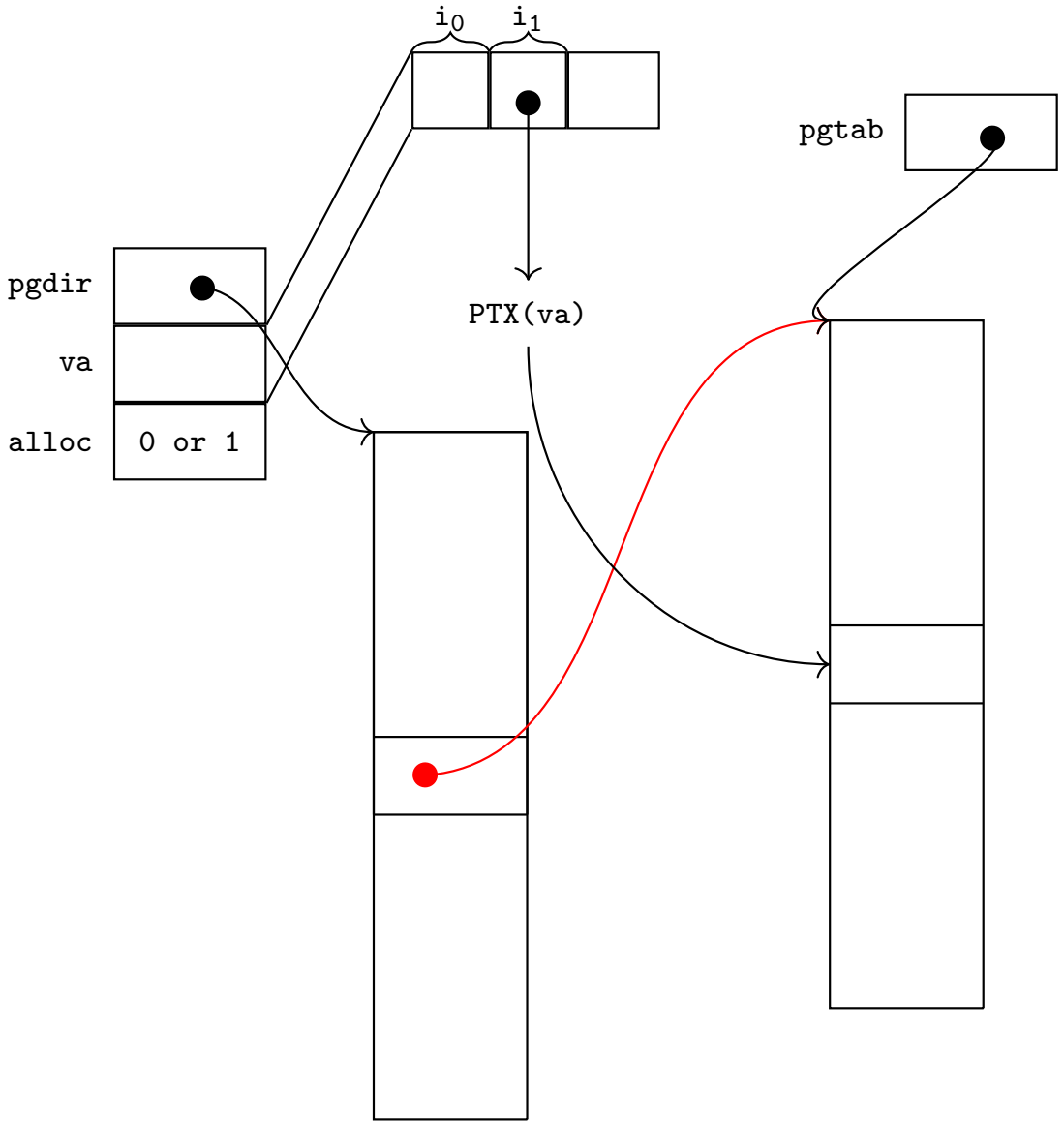

Ex 1: **walkpgdir** when internal table exists

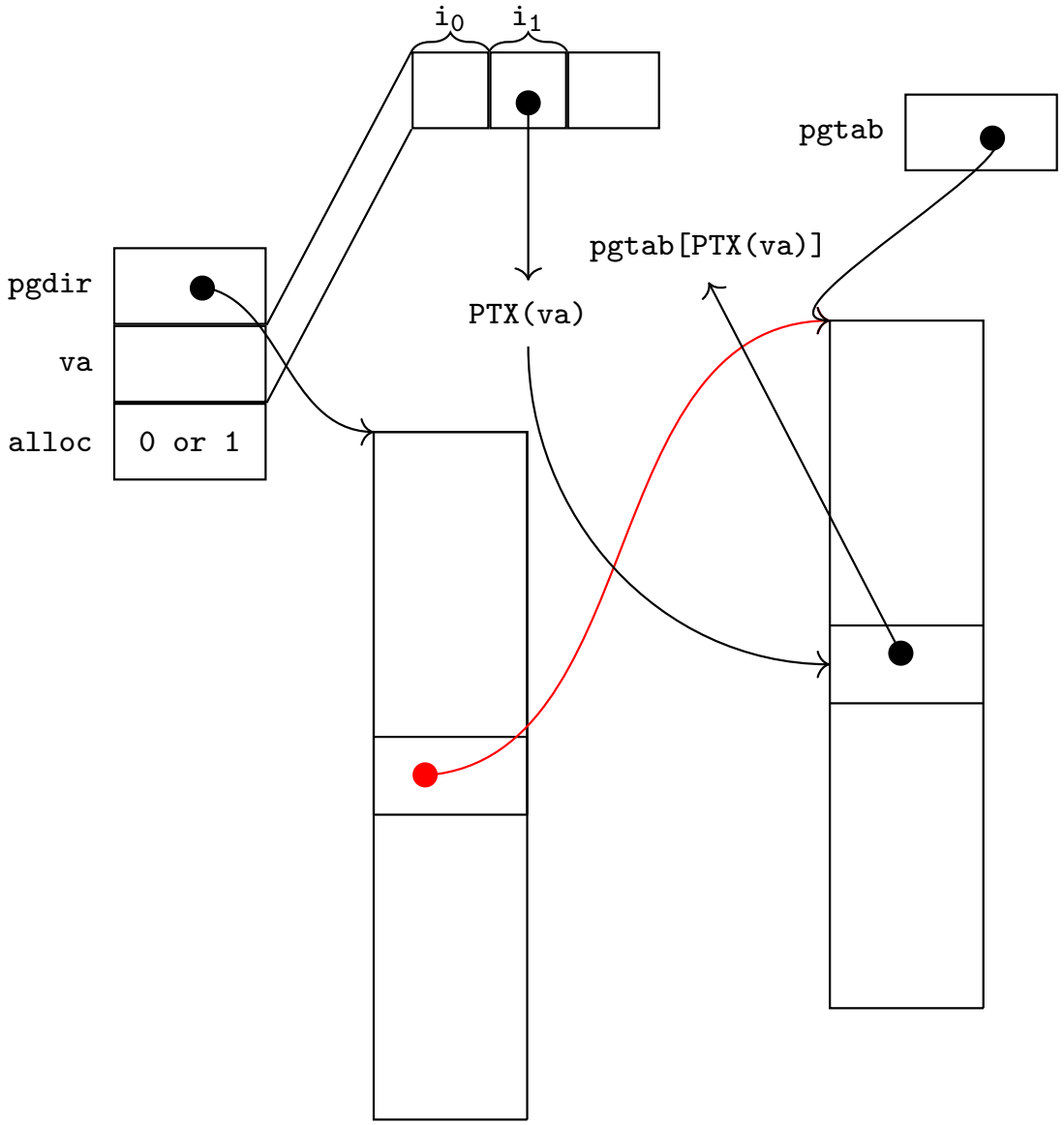

Ex 1: **walkpgdir** when internal table exists

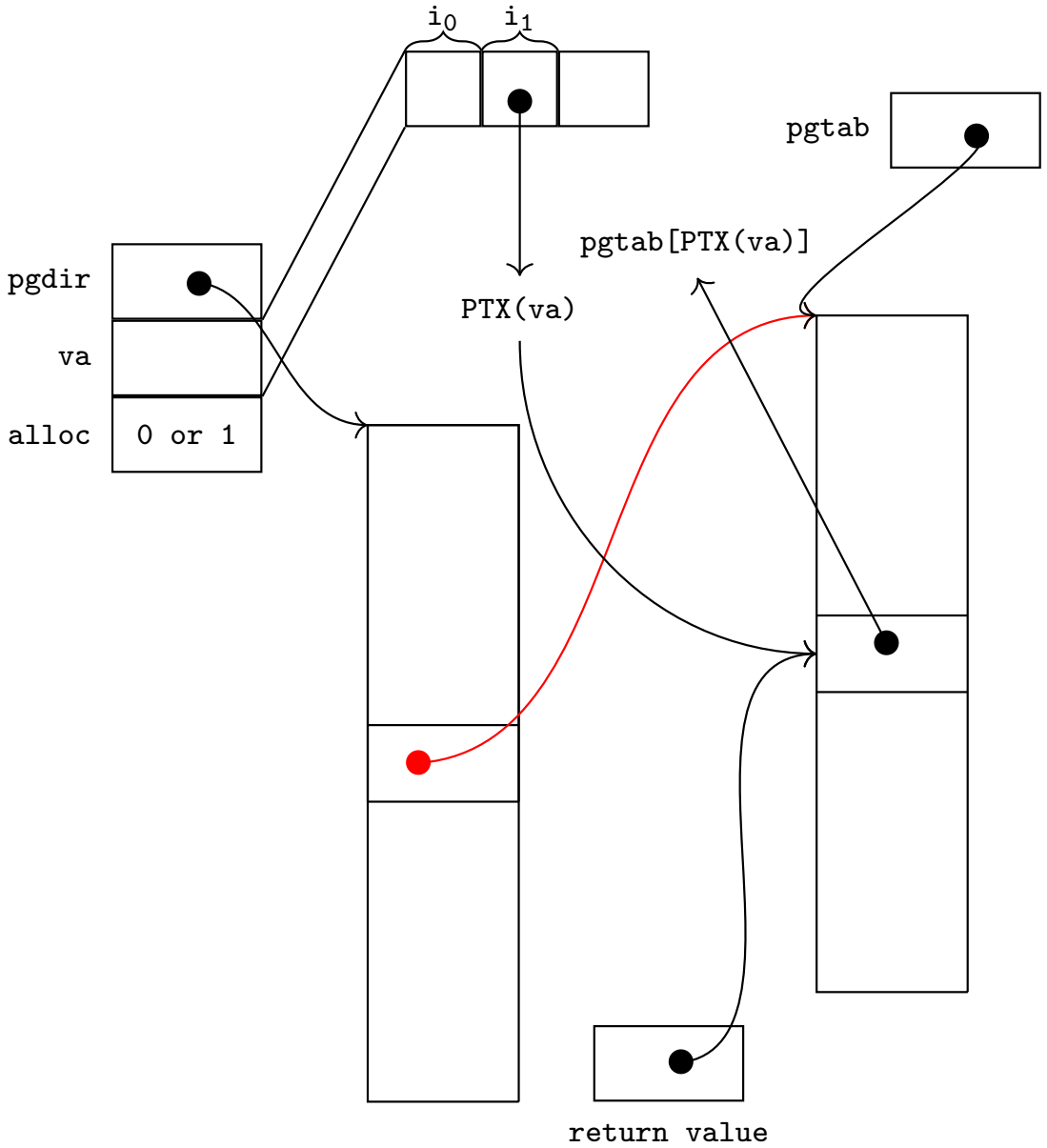

Ex 2: **walkpgdir** without internal table

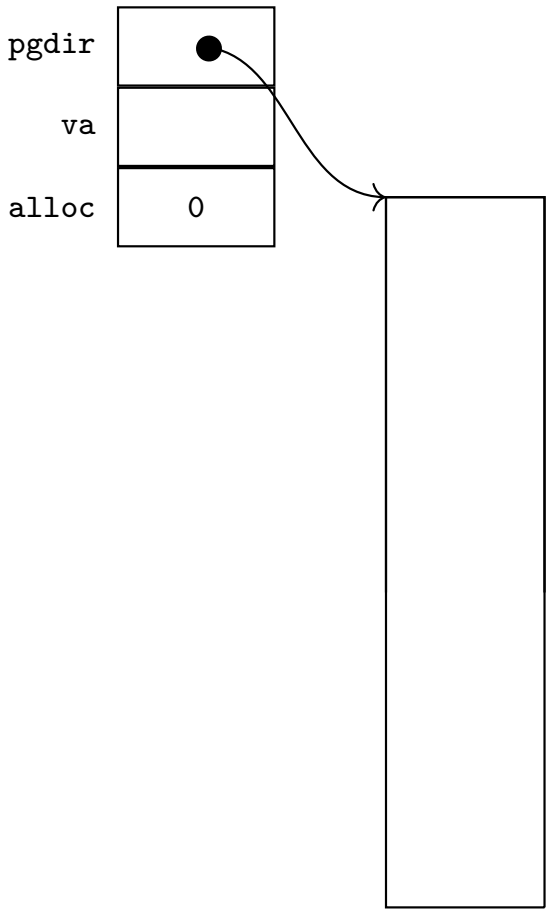

Ex 2: **walkpgdir** without internal table

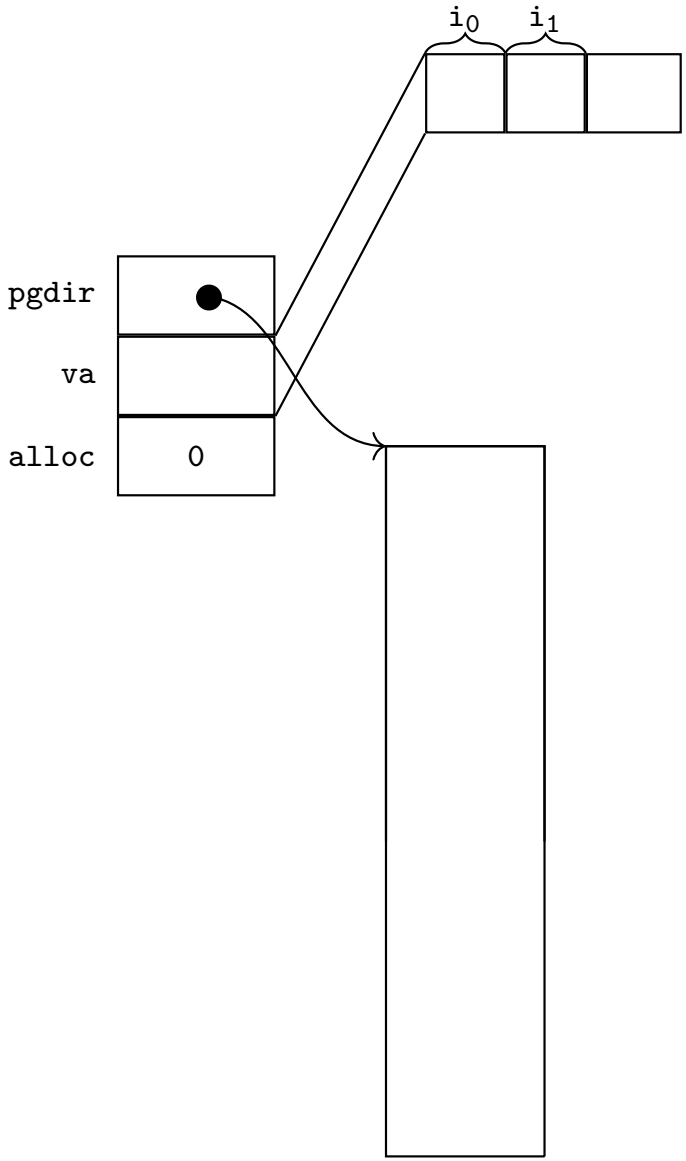

Ex 2: **walkpgdir** without internal table

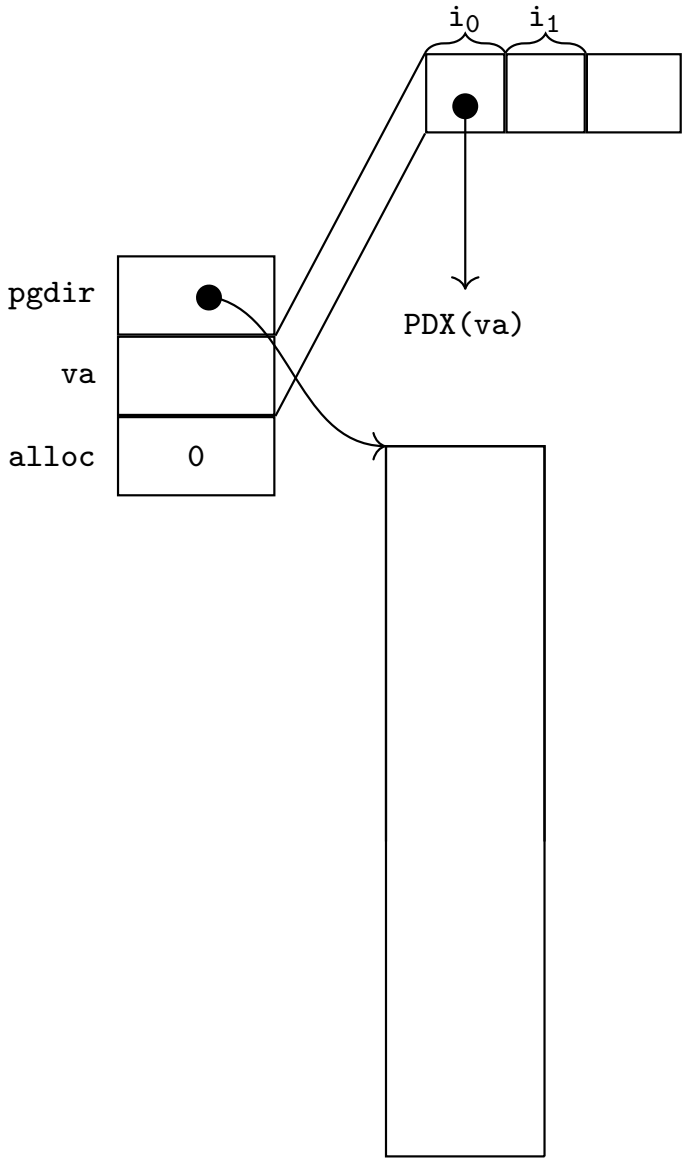

Ex 2: **walkpgdir** without internal table

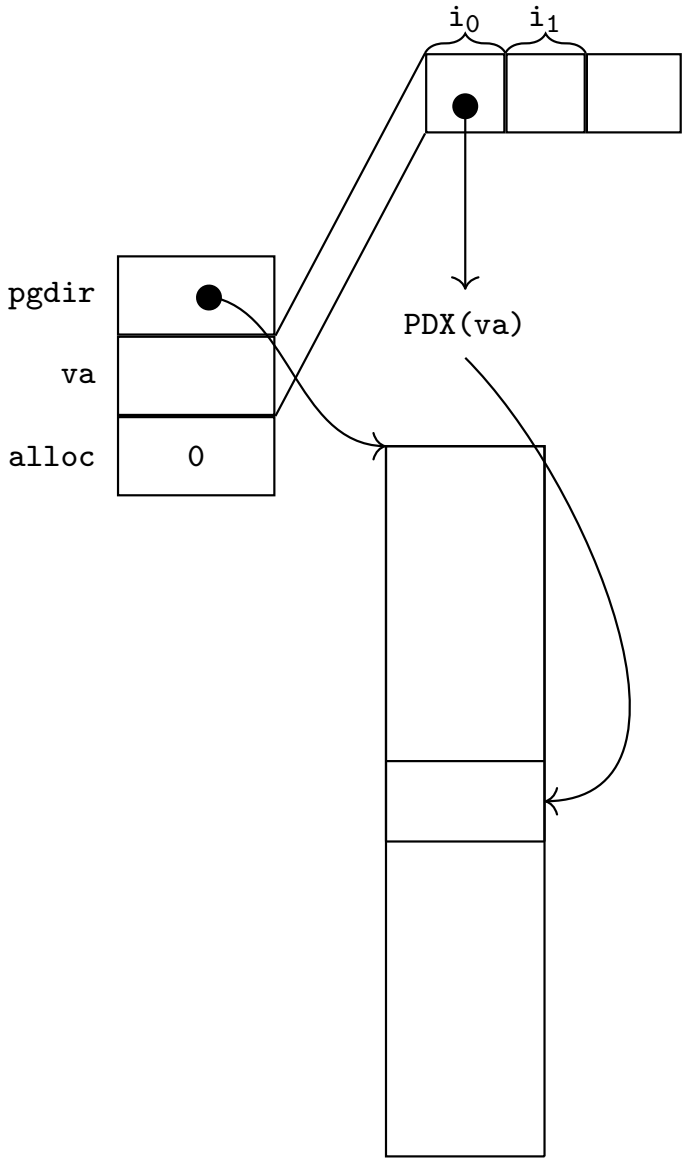

Ex 2: **walkpgdir** without internal table

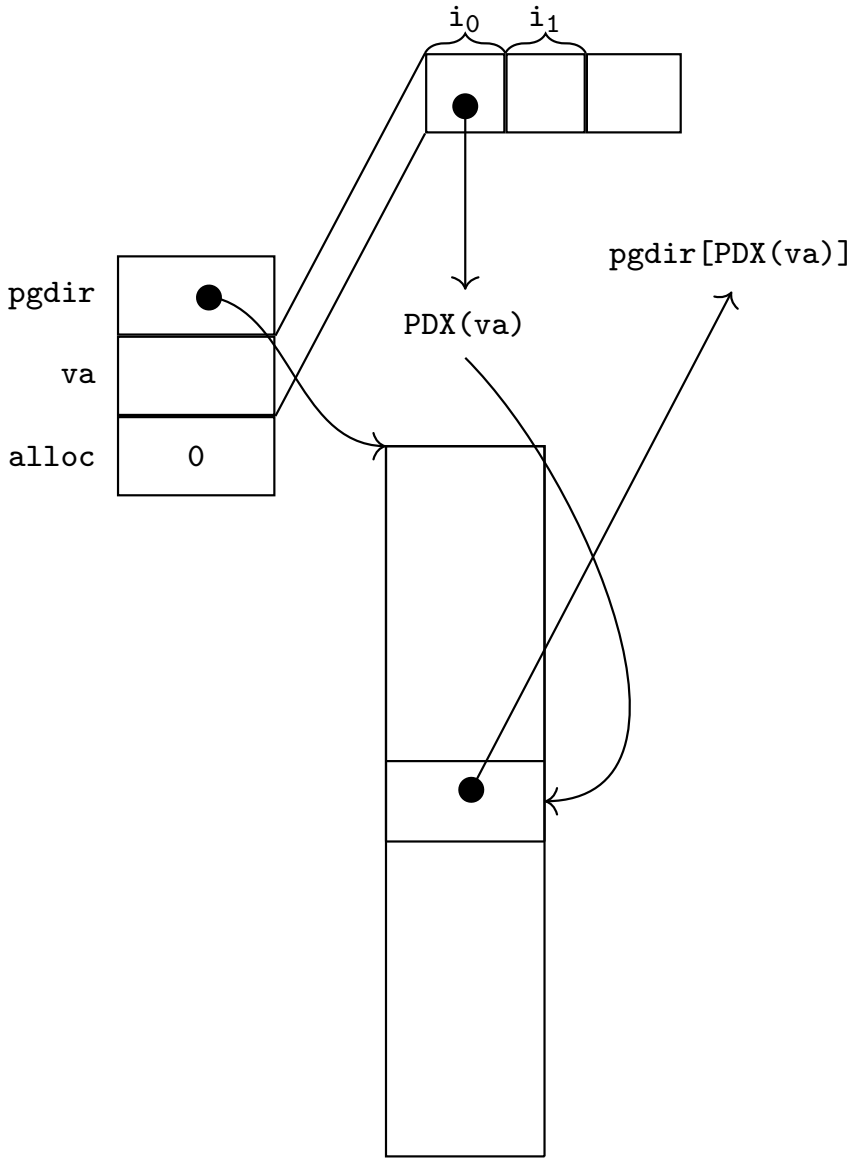

Ex 2: **walkpgdir** without internal table

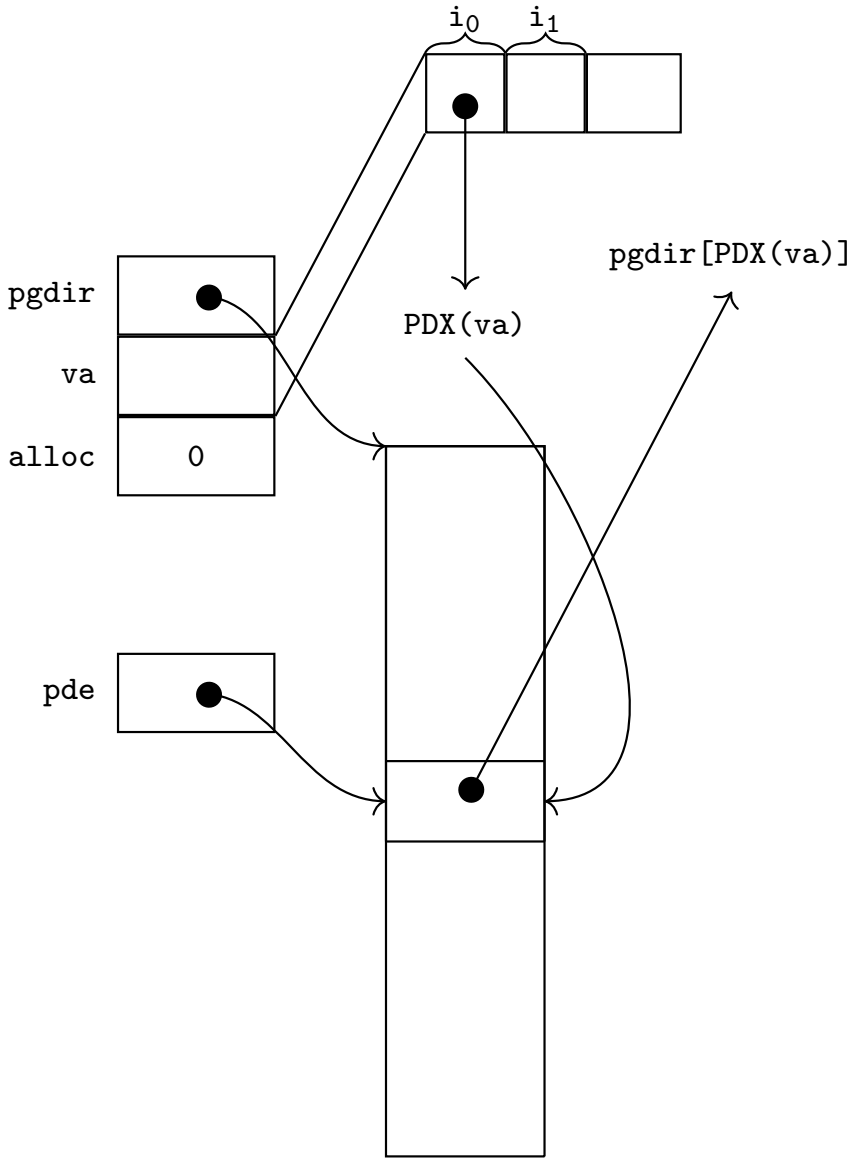

Ex 2: **walkpgdir** without internal table

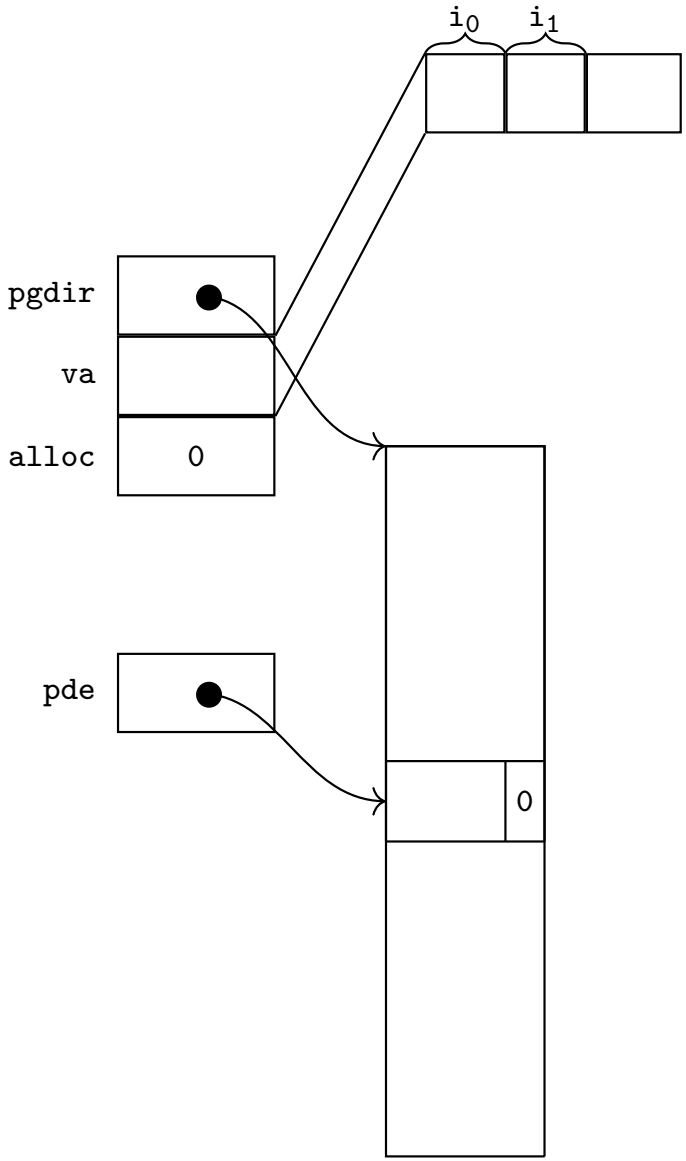

Ex 2: **walkpgdir** without internal table

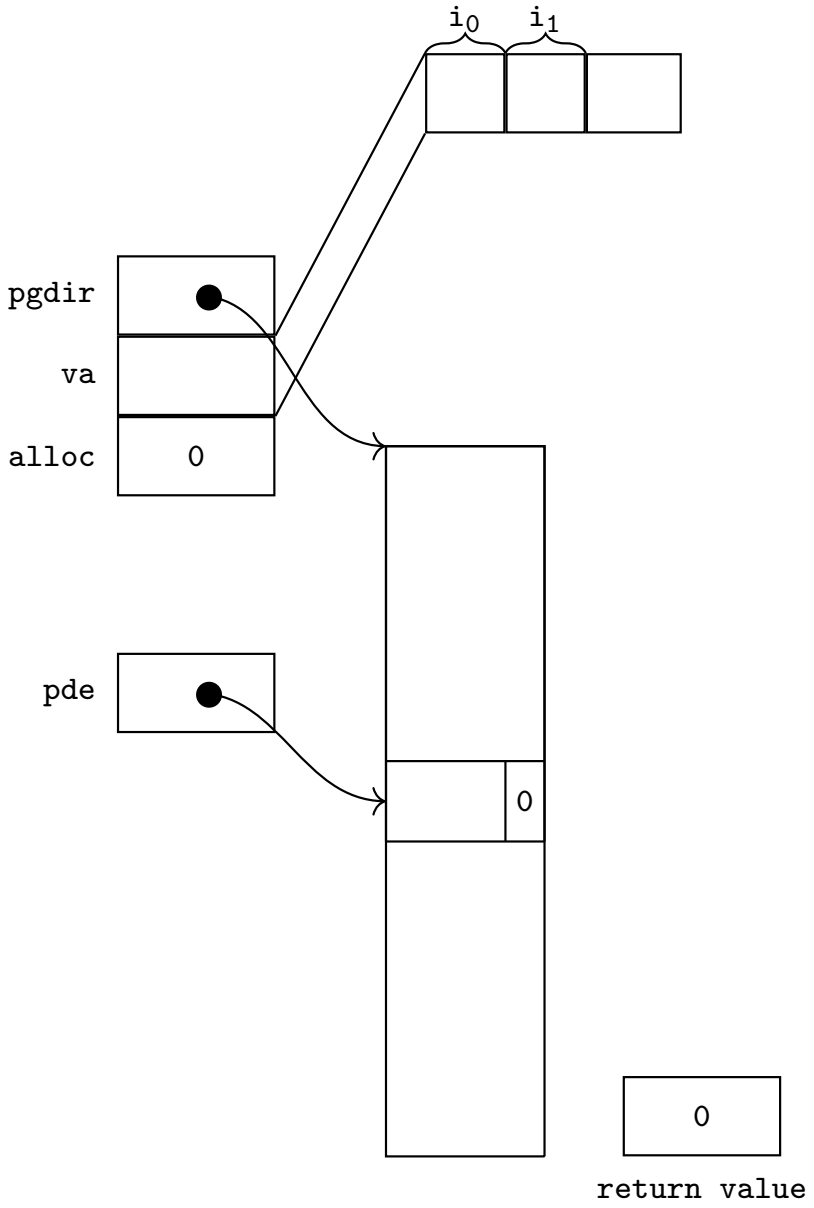

Ex 3: **walkpgdir** without internal table

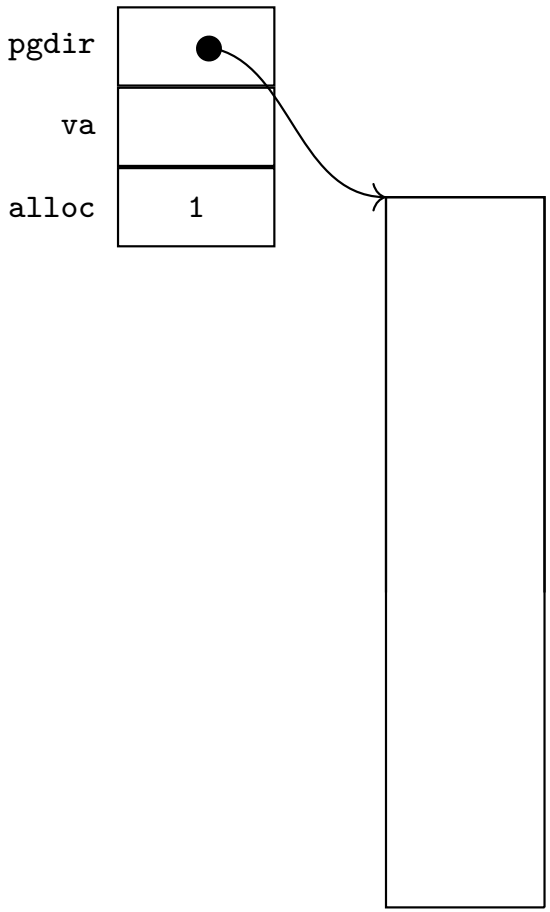

Ex 3: **walkpgdir** without internal table

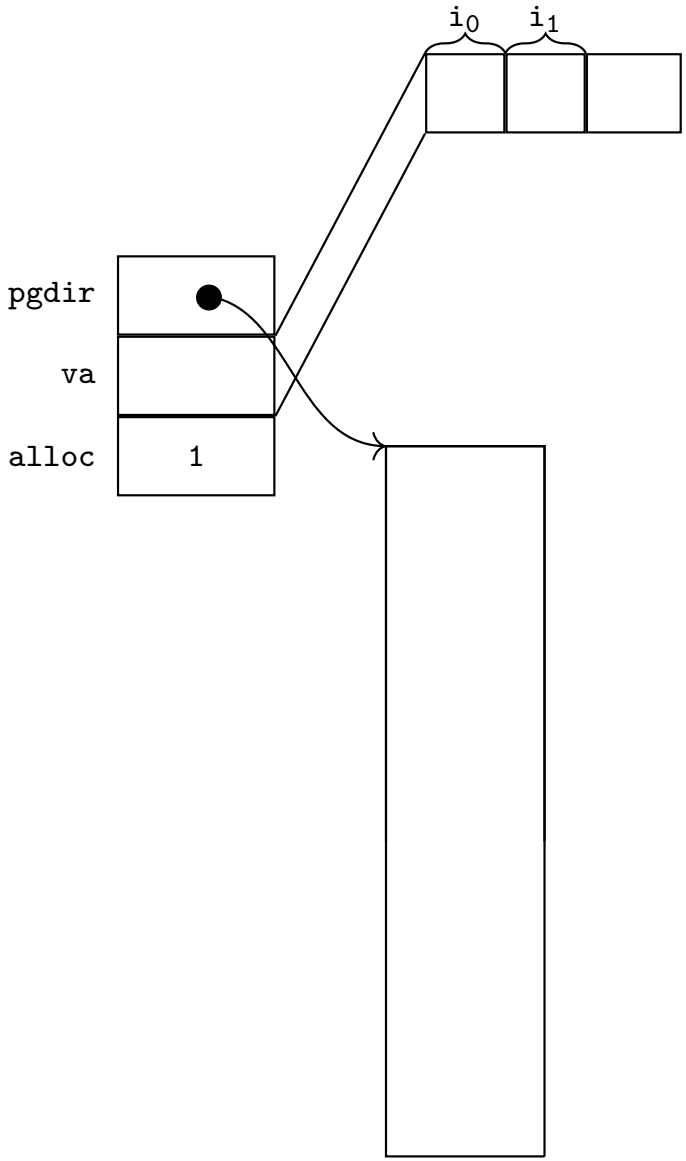

Ex 3: **walkpgdir** without internal table

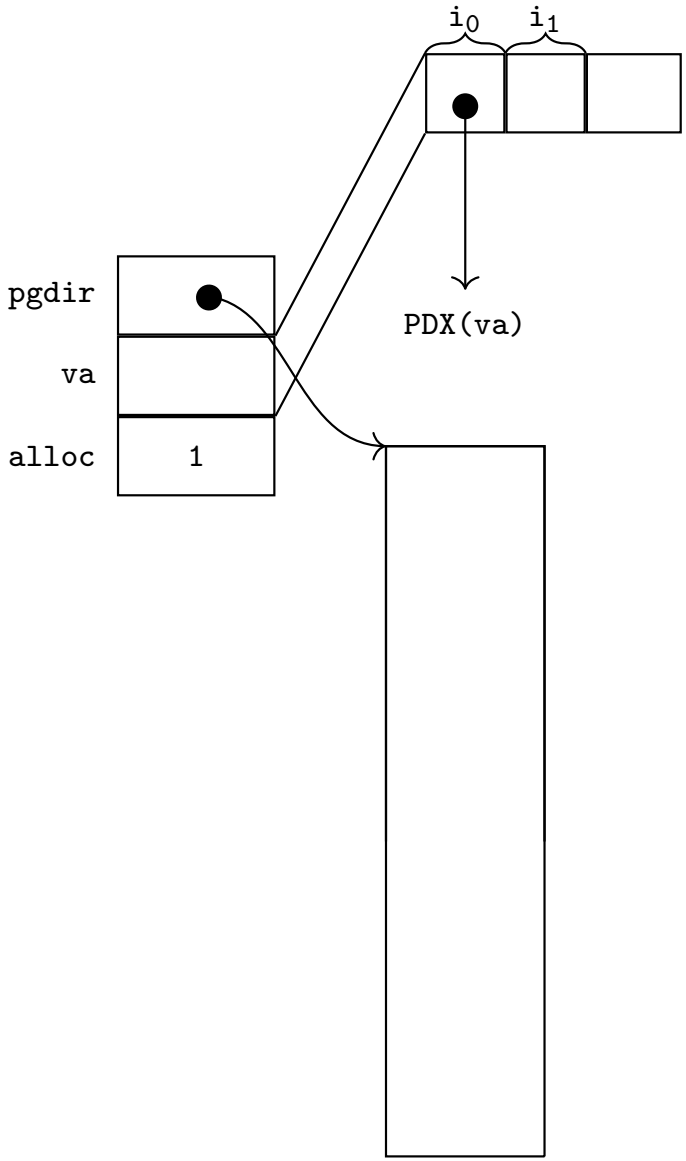

Ex 3: **walkpgdir** without internal table

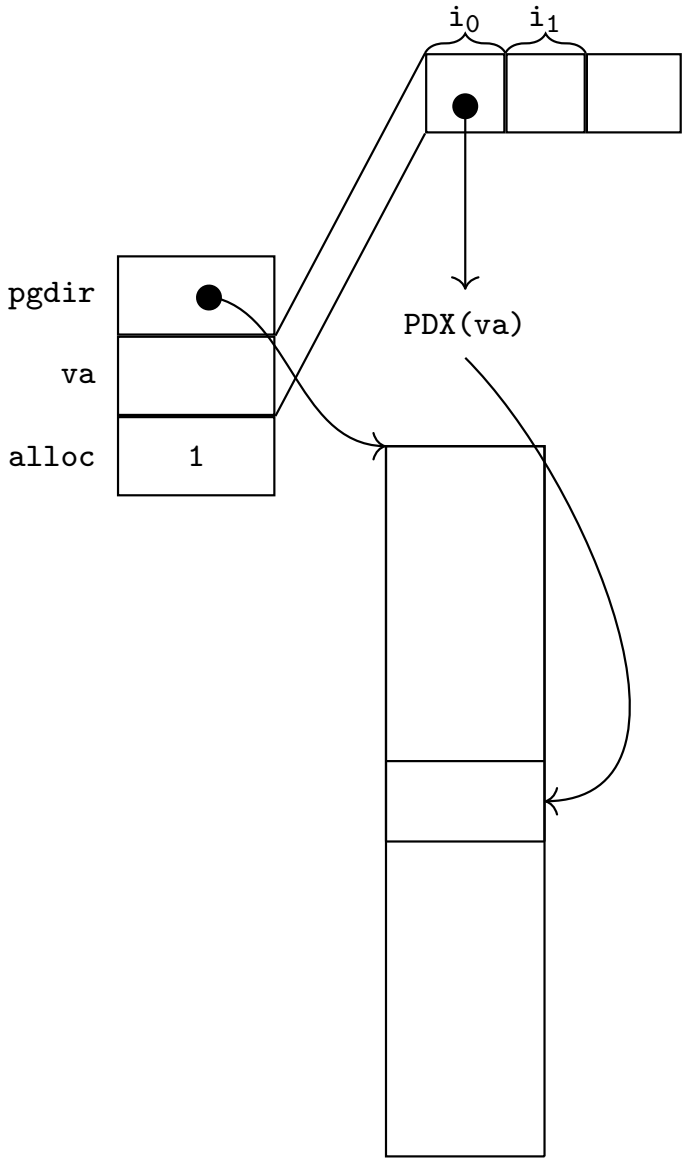

Ex 3: **walkpgdir** without internal table

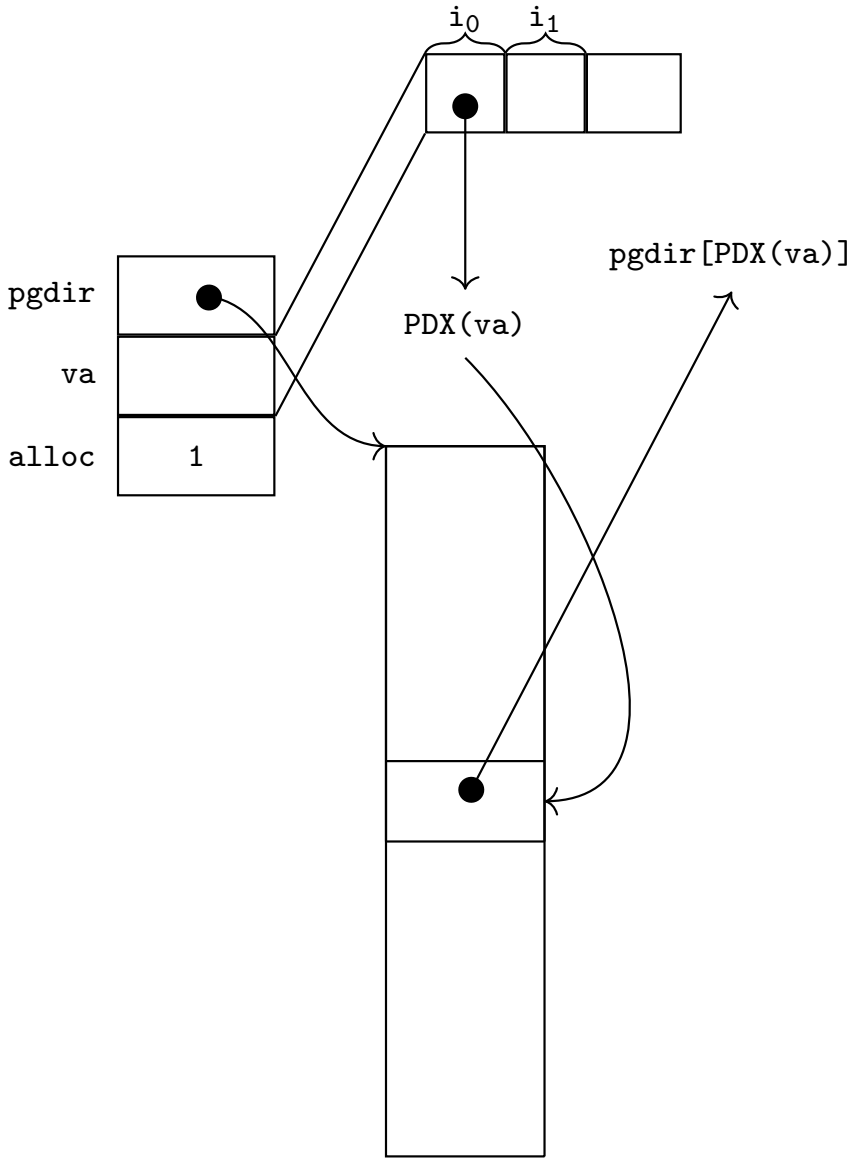

Ex 3: **walkpgdir** without internal table

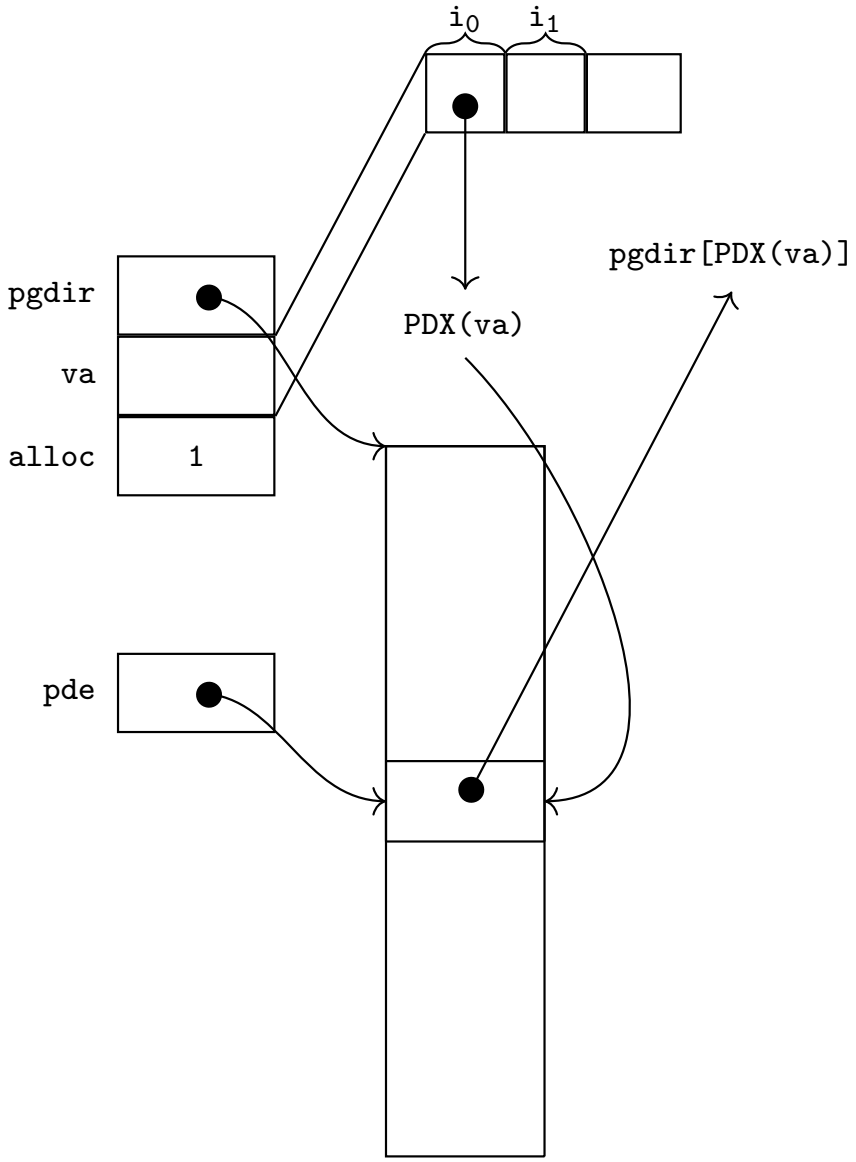

Ex 3: **walkpgdir** without internal table

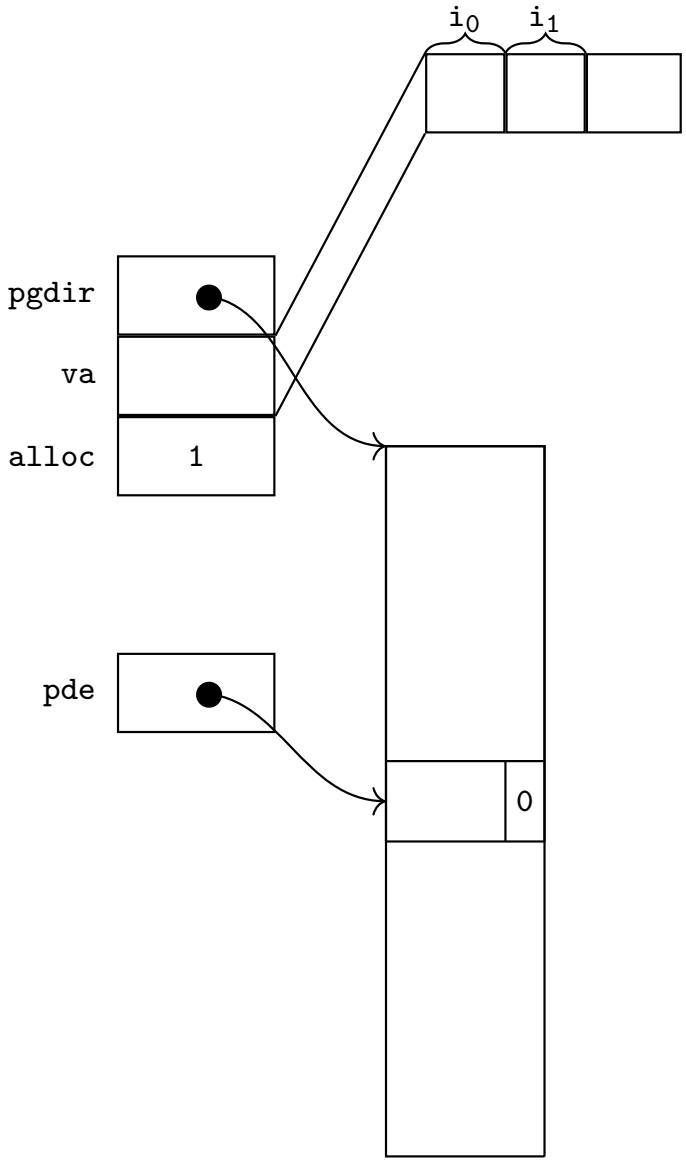

Ex 3: **walkpgdir** without internal table

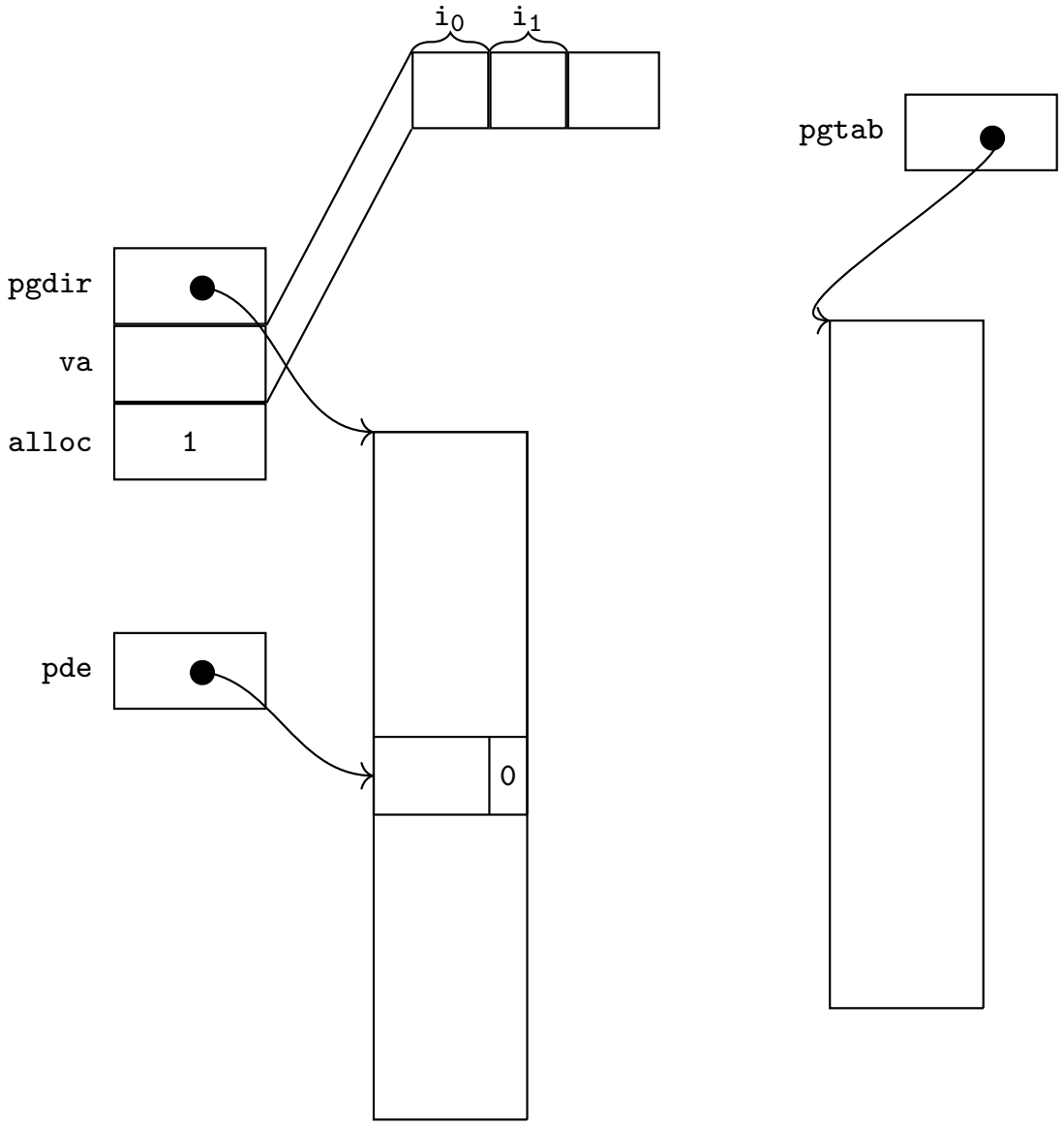

Ex 3: **walkpgdir** without internal table

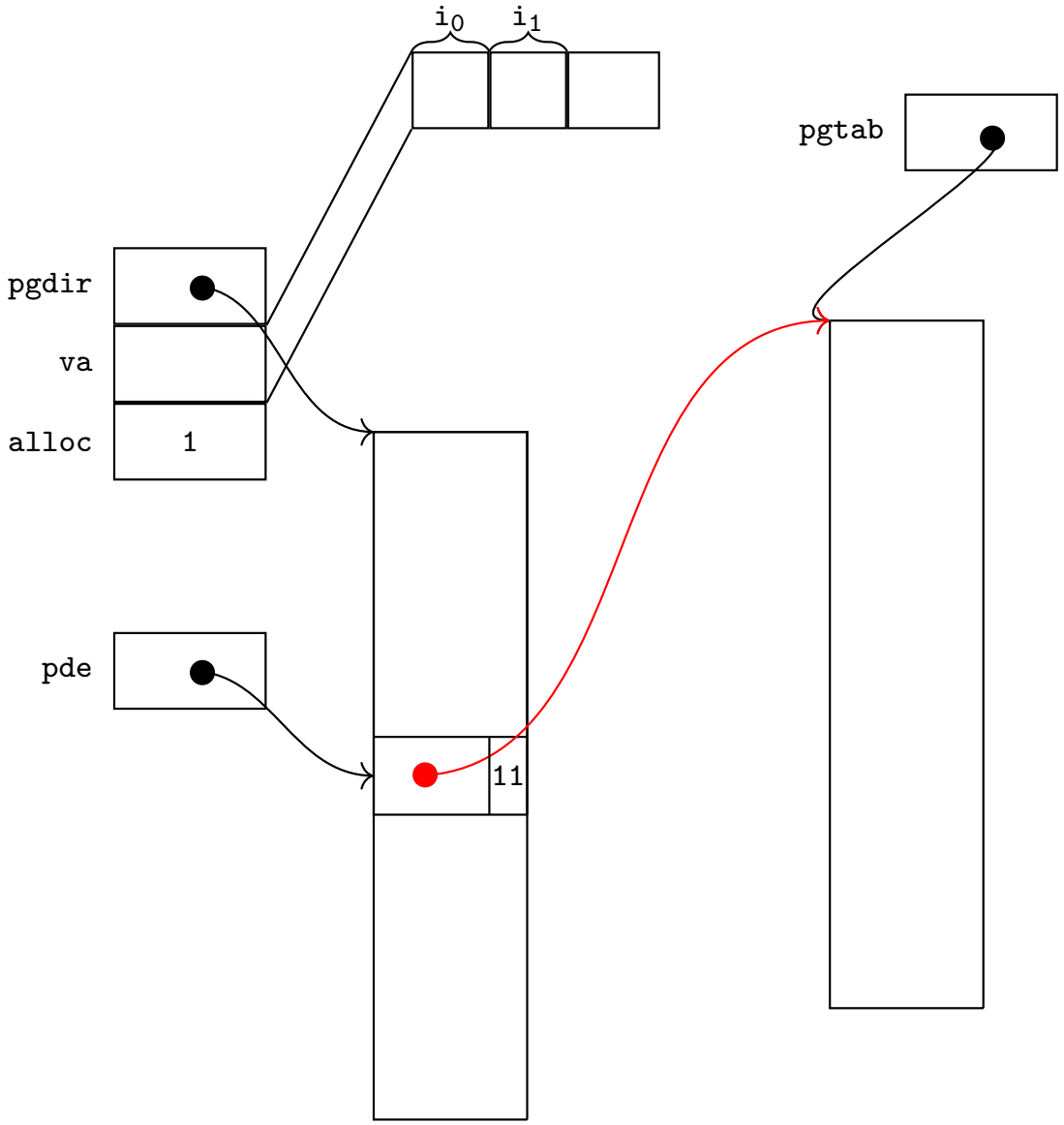

Ex 3: **walkpgdir** without internal table

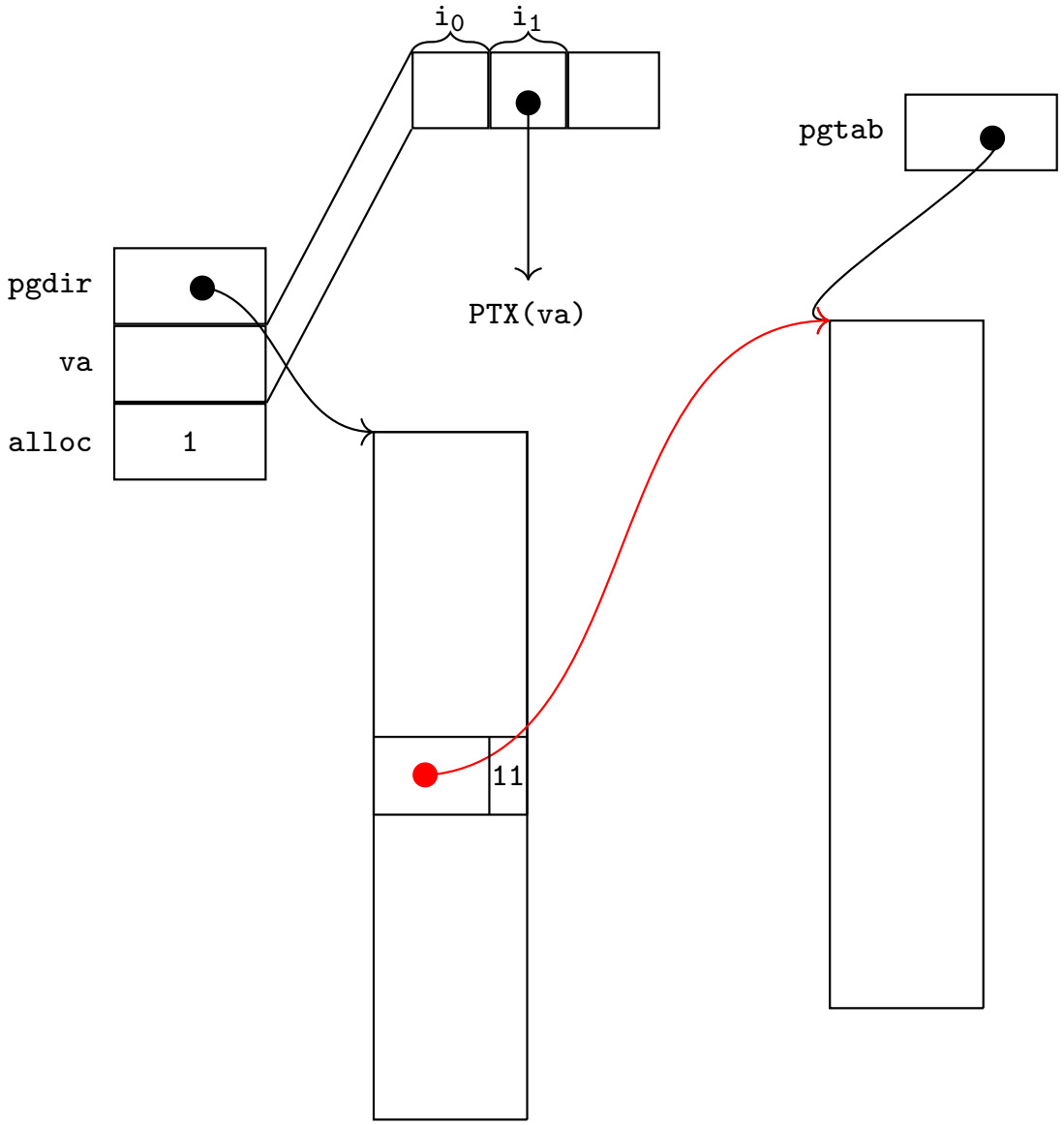

Ex 3: **walkpgdir** without internal table

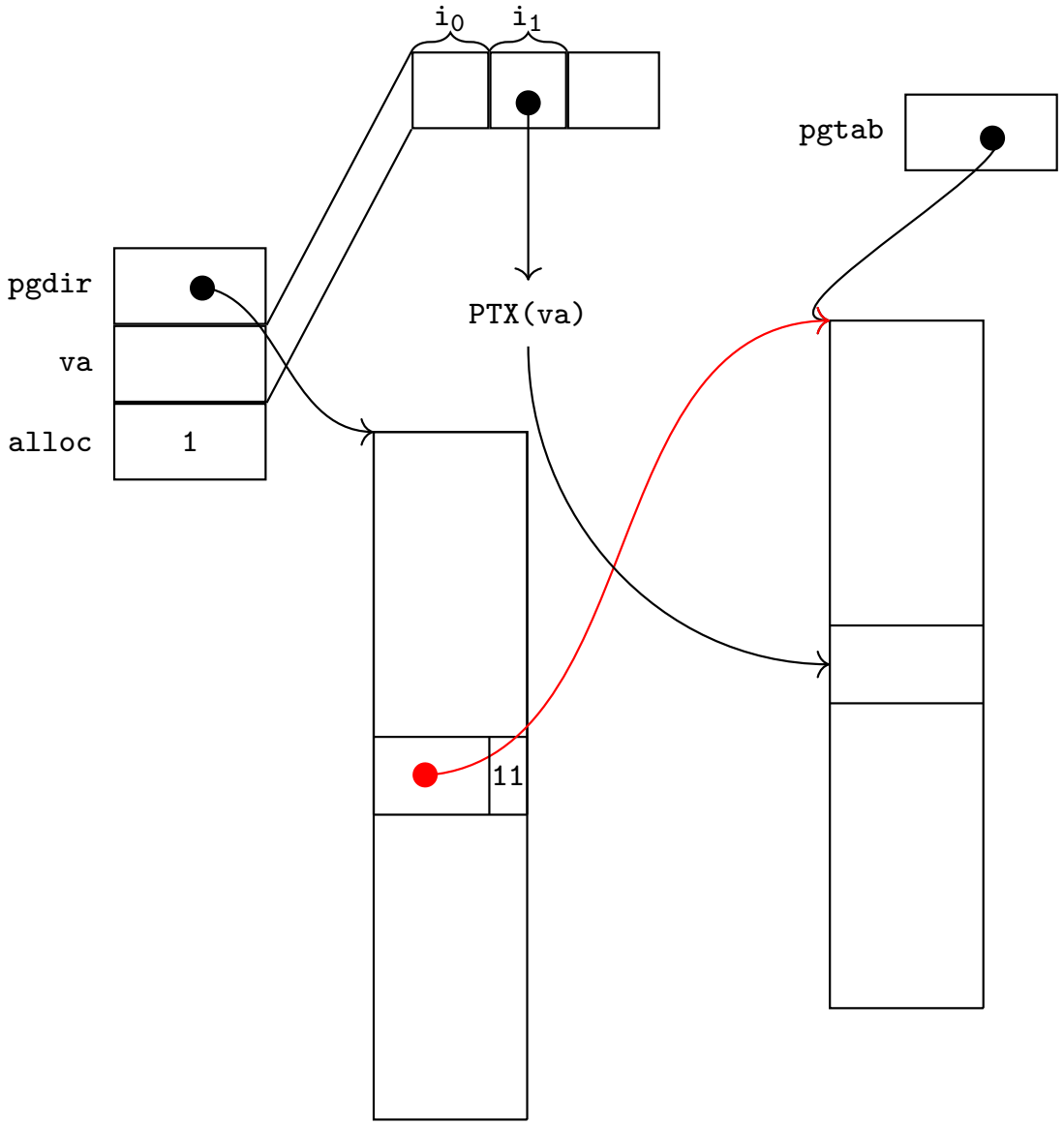

Ex 3: **walkpgdir** without internal table

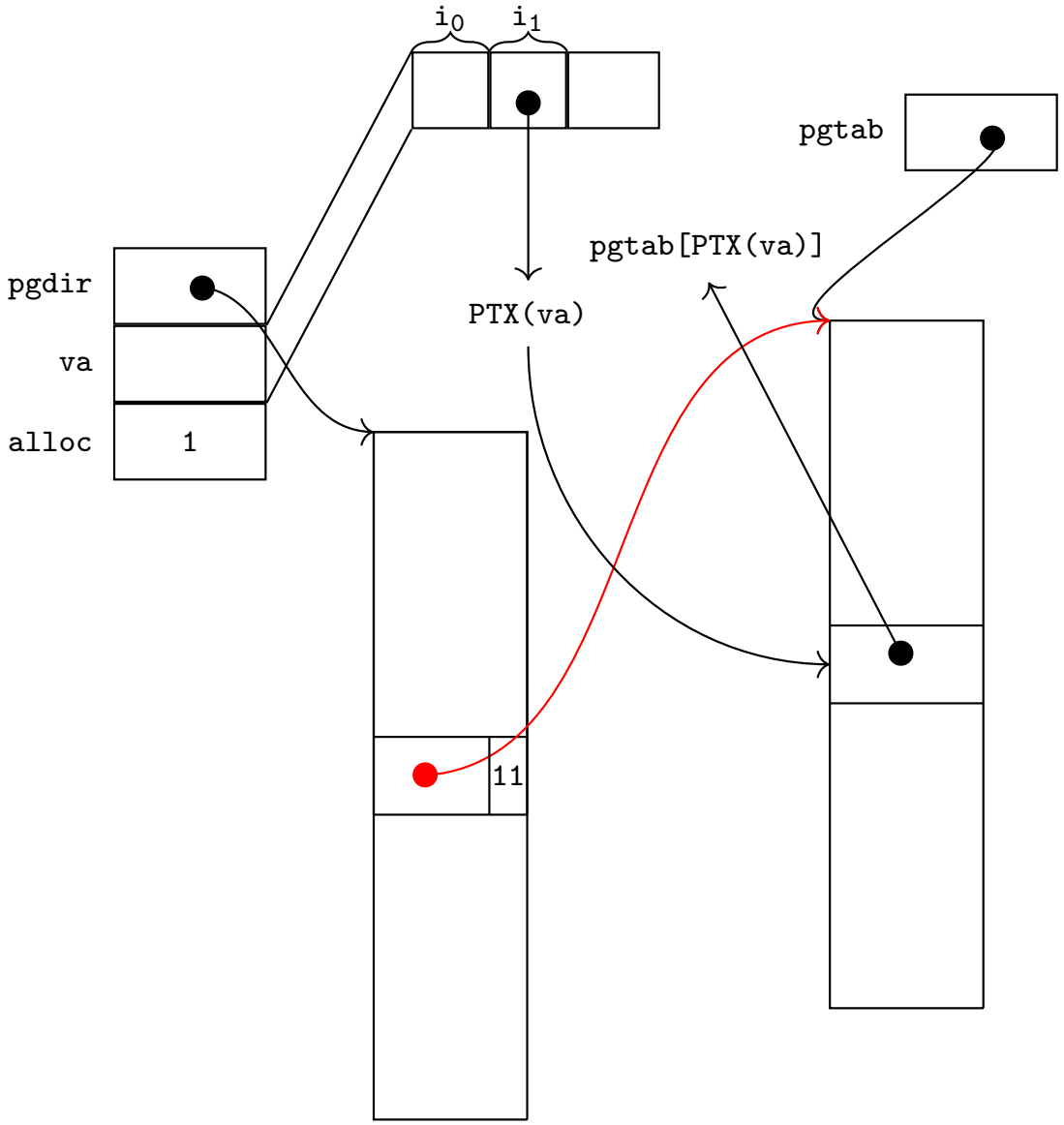

Ex 3: **walkpgdir** without internal table

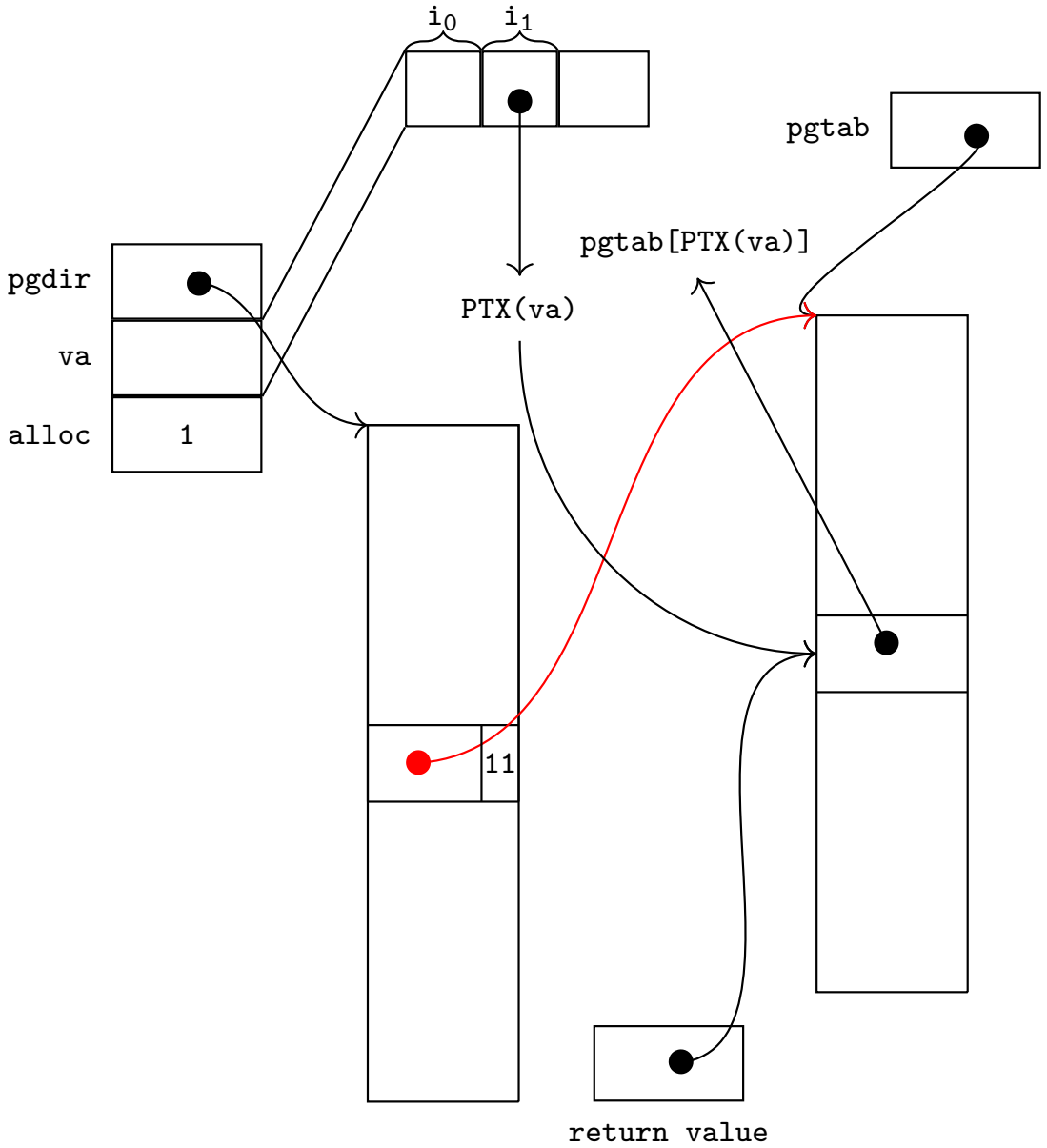

walkpgdir

```
1735 #define PDX(va) (((uint)(va) >> PDXSHIFT) & 0x3FF)
     #define PTX(va) (((uint)(va) >> PTXSHIFT) & 0x3FF)
     #define PTE_P 1
     static pte_t *walkpgdir(pde_t *pgdir,const void *va,
                                    int alloc) {
       pde_t *pde;
       pte_t *pgtab;
       pde = &pgdir[PDX(va)];
       if (*pde & PTE_P)
        pgtab = (pte_t*)p2v(PTE_ADDR(*pde));
       else {
        if (!alloc || (pgtab = (pte_t*)kalloc()) == 0)
         return 0;
        memset(pgtab, 0, PGSIZE);
        *pde = v2p(pgtab) | PTE_P | PTE_W | PTE_U;
       }
       return &pgtab[PTX(va)];
     }
```

mappages

```
static int mappages(pde_t *pgdir, void *va, uint size,
                    uint pa, int perm) {
  char *a, *last;
  pte_t *pte;

  a = (char*)PGROUNDDOWN((uint)va);
  last = (char*)PGROUNDDOWN(((uint)va) + size - 1);
  for (;;) {
    if ((pte = walkpgdir(pgdir, a, 1)) == 0)
      return -1;
    if (*pte & PTE_P) panic("remap");
    *pte = pa | perm | PTE_P;
    if (a == last) break;
    a += PGSIZE;
    pa += PGSIZE;
  }
  return 0;
}
```

mappages


pgdir
0
0
512
0
513
0
1022
0
1023
0
0x00000000
0x80000000
0x00001000
0x80001000
0x00002000
0x80002000
0x003FE000
0x803FE000
0x003FF000
0x803FF000
0x00400000
0x80400000
0x00401000
0x80401000
pte
pa
va

mappages

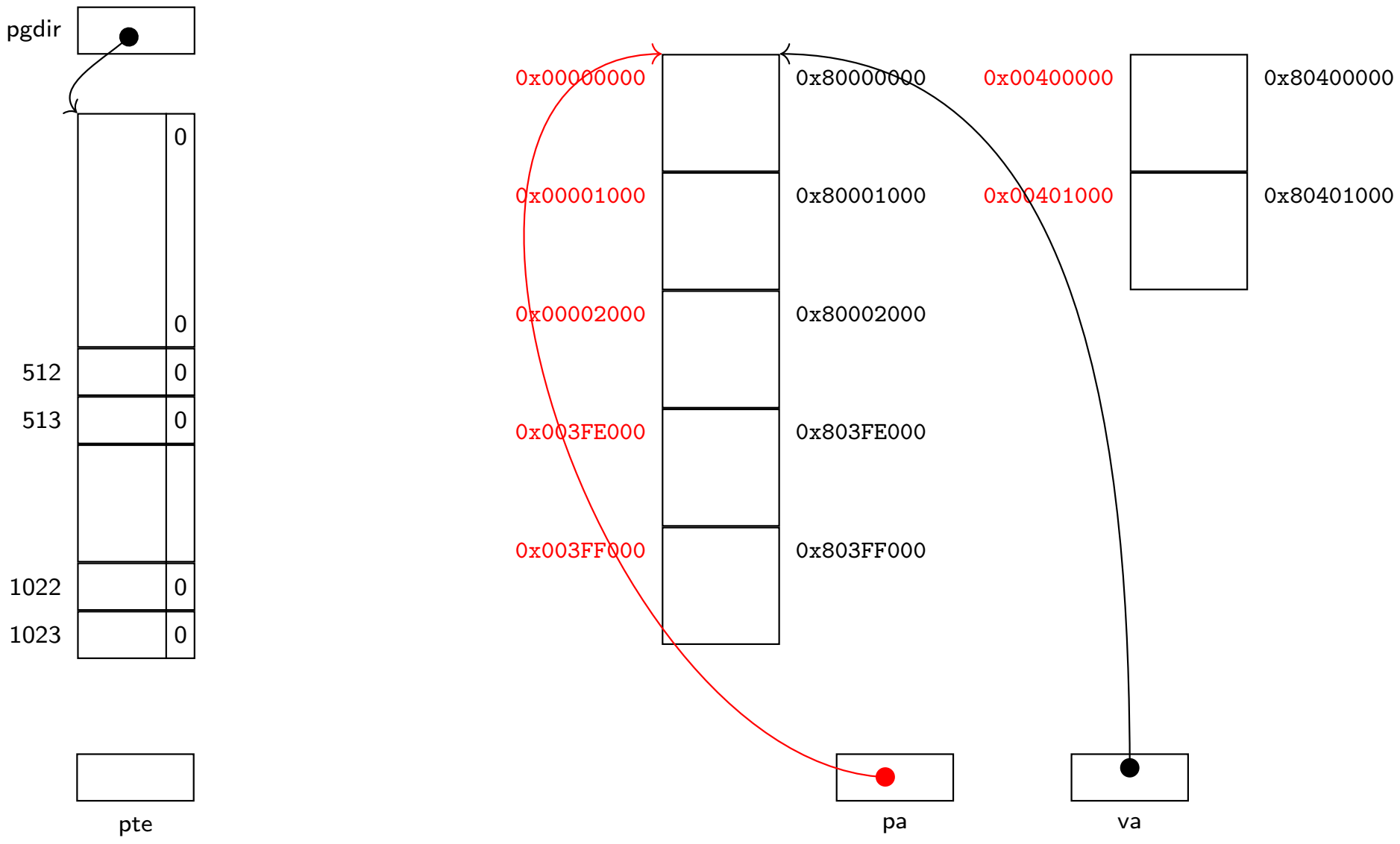
pgdir
0
0
512
0
513
0
1022
0
1023
0
pte
0x00000000
0x80000000
0x00400000
0x80400000
0x00001000
0x80001000
0x00401000
0x80401000
0x00002000
0x80002000
0x003FE000
0x803FE000
0x003FF000
0x803FF000
pa
va

mappages

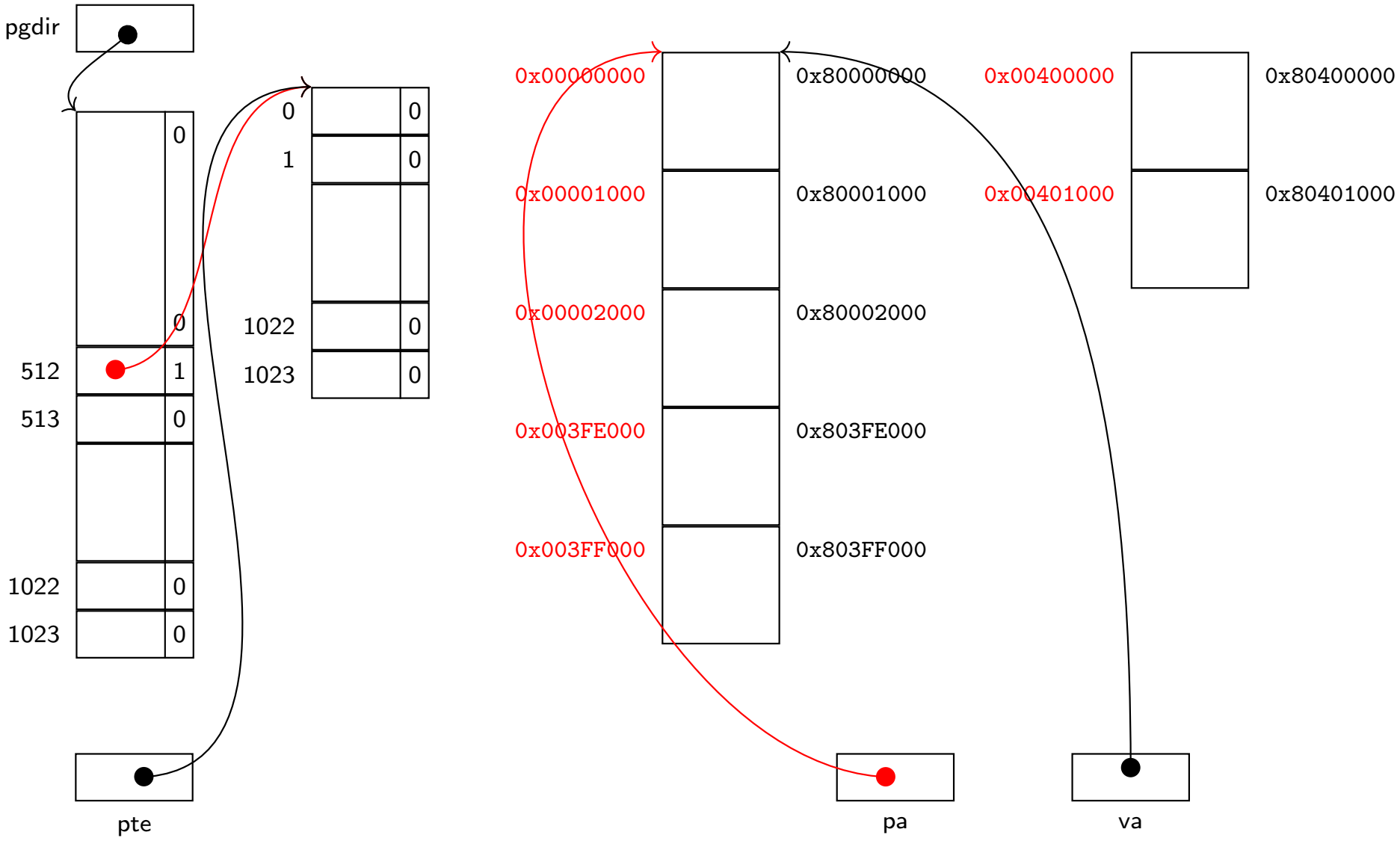
pgdir
0
0
512
1
513
0
1022
0
1023
0
0
0
1
0
1022
0
1023
0
0x00000000
0x80000000
0x00400000
0x80400000
0x00001000
0x80001000
0x00401000
0x80401000
0x00002000
0x80002000
0x003FE000
0x803FE000
0x003FF000
0x803FF000
pte
pa
va

mappages

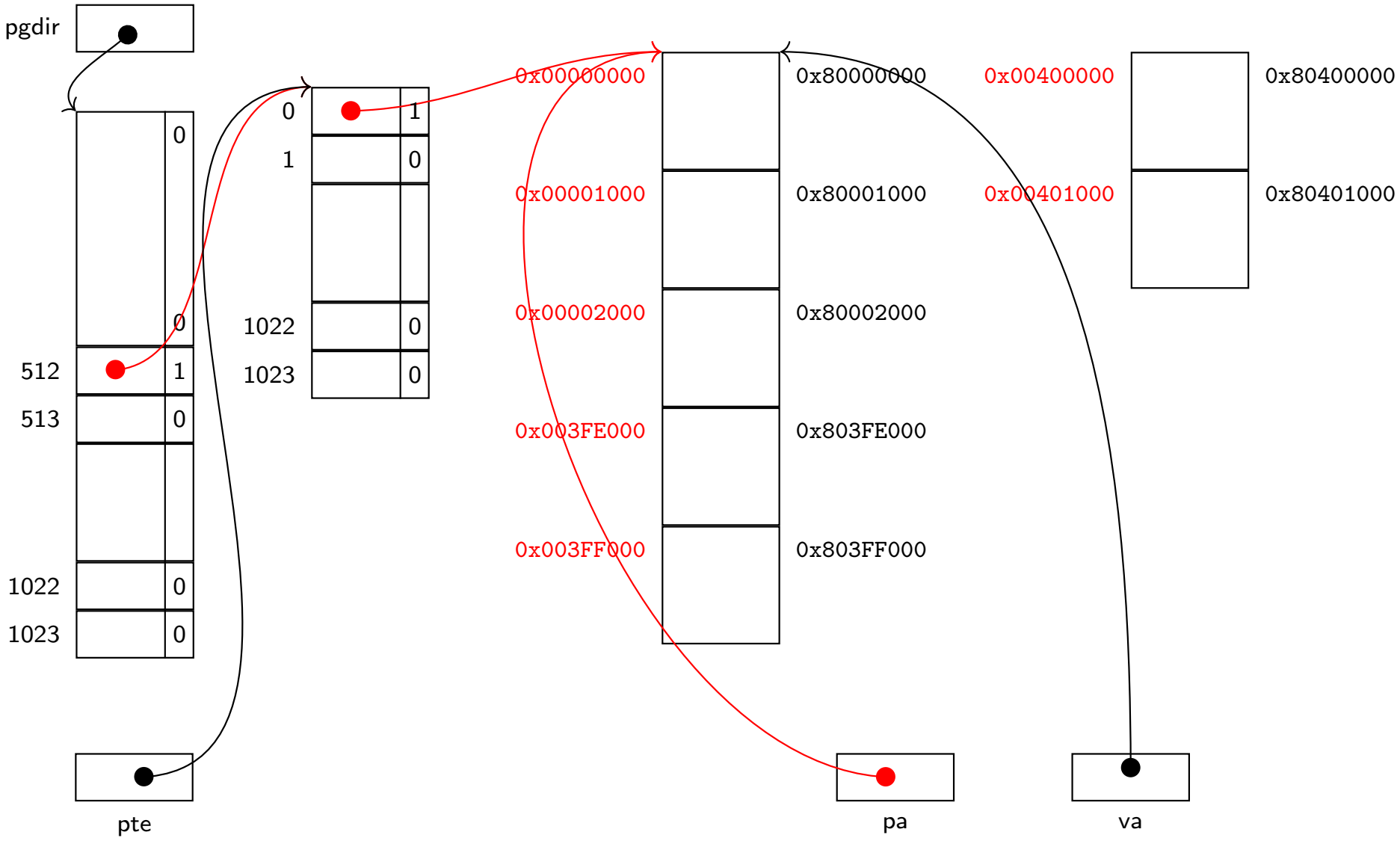
pgdir
0
0
512
1
513
0
1022
0
1023
0
0
1
1
0
1022
0
1023
0
0x00000000
0x80000000
0x00400000
0x80400000
0x00001000
0x80001000
0x00401000
0x80401000
0x00002000
0x80002000
0x003FE000
0x803FE000
0x003FF000
0x803FF000
pte
pa
va

mappages

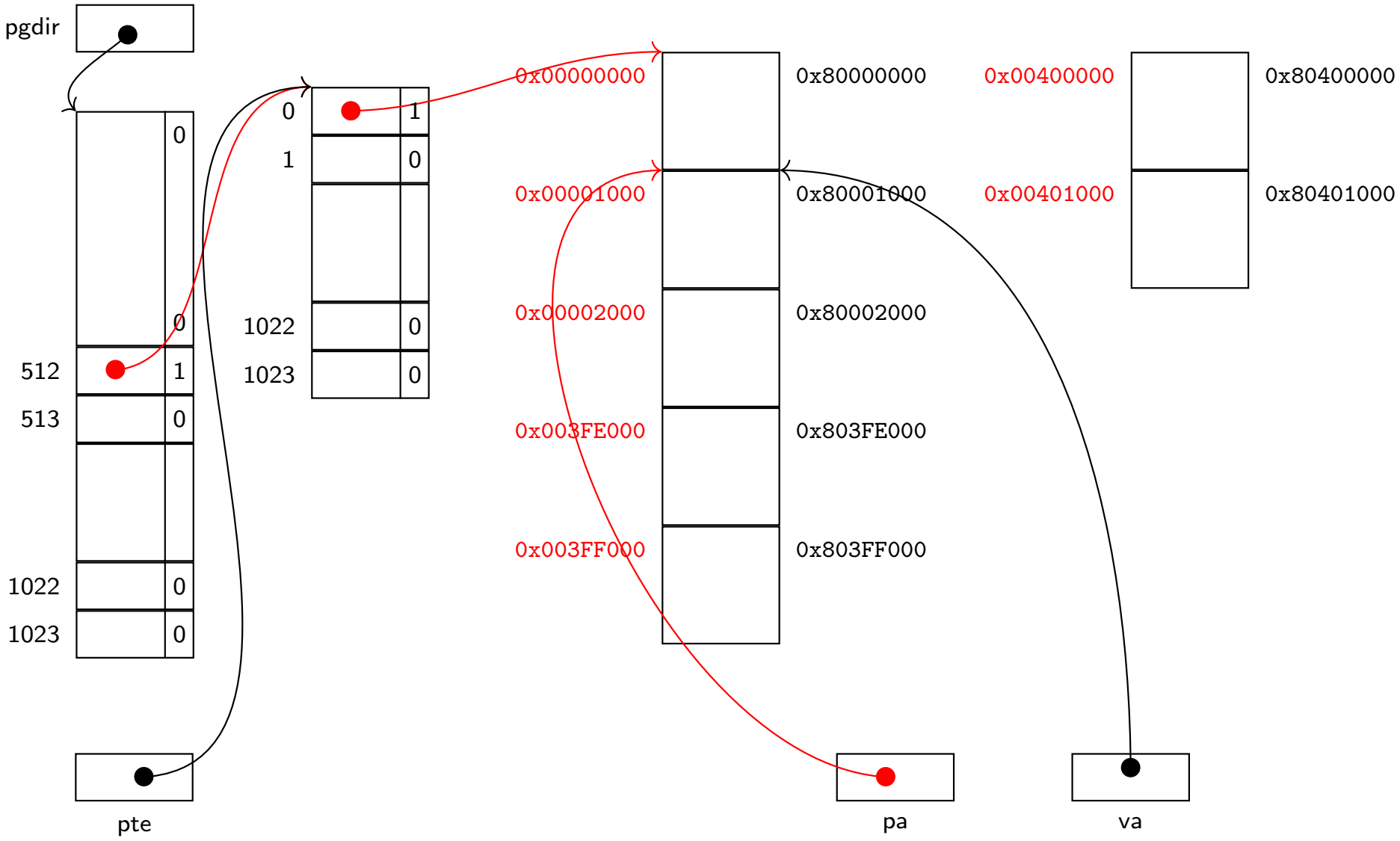
pgdir
0
0
512
1
513
0
1022
0
1023
0
0
1
1
0
1022
0
1023
0
0x00000000
0x80000000
0x00001000
0x80001000
0x00002000
0x80002000
0x003FE000
0x803FE000
0x003FF000
0x803FF000
0x00400000
0x80400000
0x00401000
0x80401000
pte
pa
va

mappages

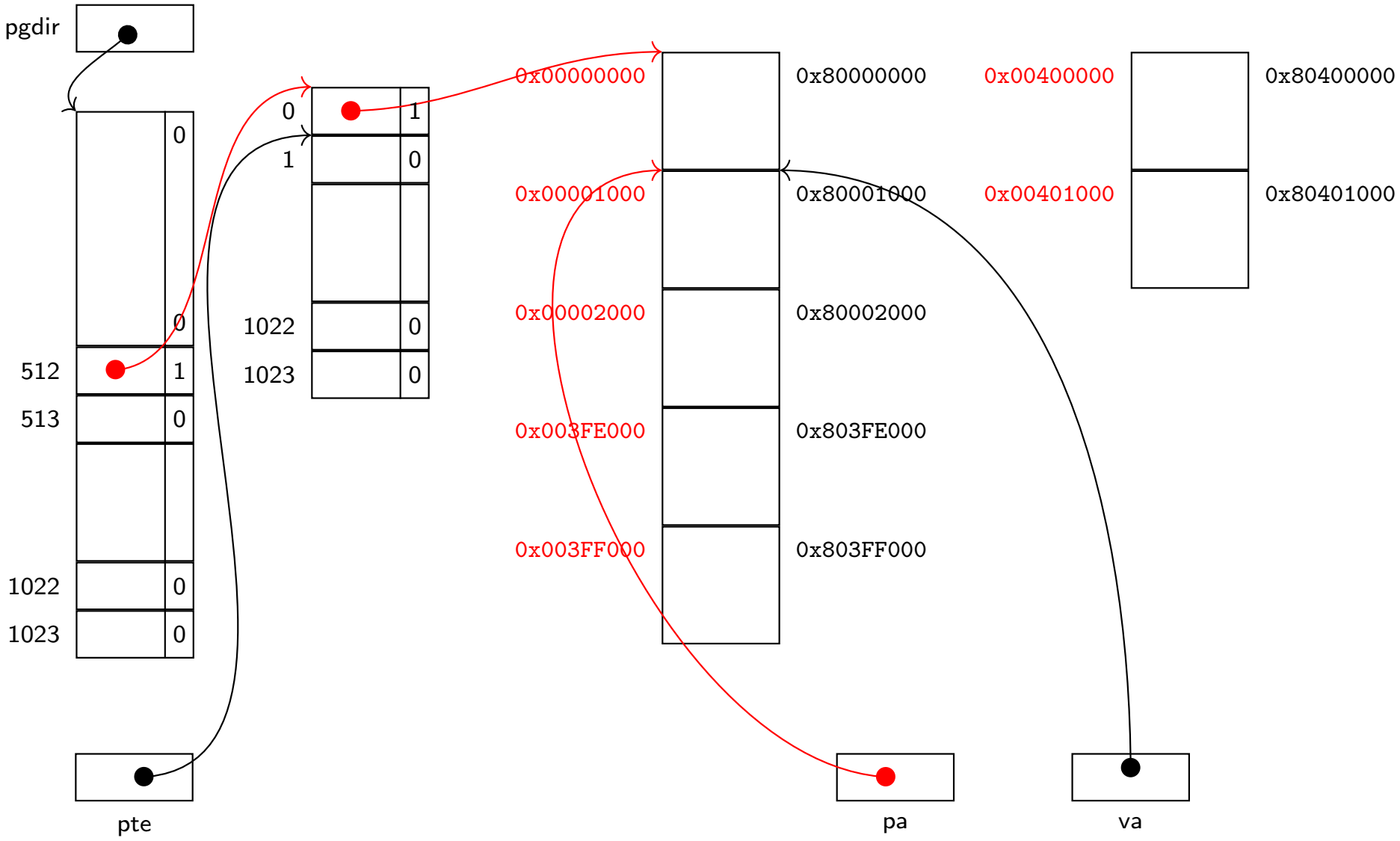
pgdir
0
0
512
1
513
0
1022
0
1023
0
0
1
1
0
1022
0
1023
0
0x00000000
0x80000000
0x00001000
0x80001000
0x00002000
0x80002000
0x003FE000
0x803FE000
0x003FF000
0x803FF000
0x00400000
0x80400000
0x00401000
0x80401000
pte
pa
va

mappages

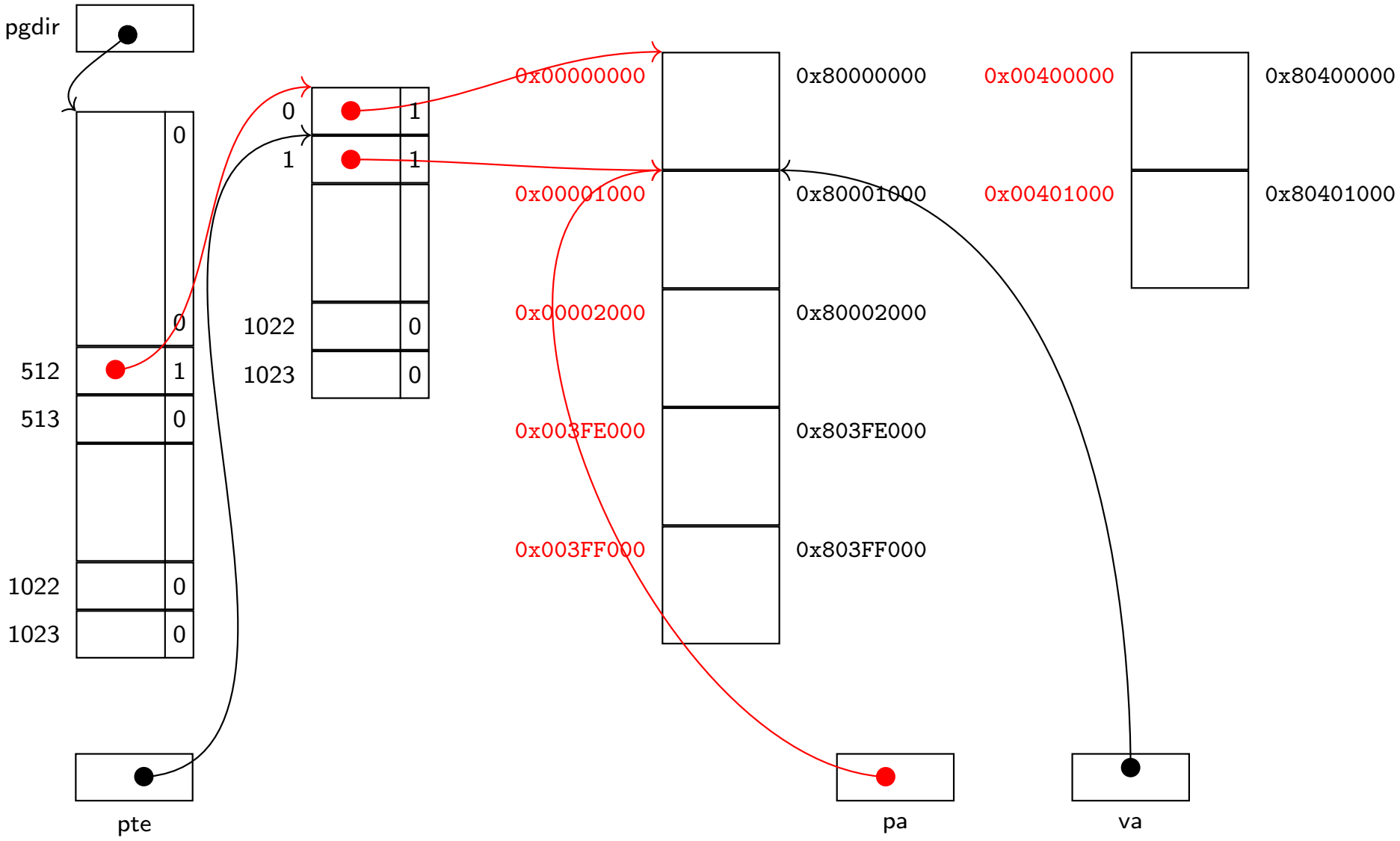
pgdir
0
0
512
1
513
0
1022
0
1023
0
0
1
1
1
1022
0
1023
0
0x00000000
0x80000000
0x00001000
0x80001000
0x00002000
0x80002000
0x003FE000
0x803FE000
0x003FF000
0x803FF000
0x00400000
0x80400000
0x00401000
0x80401000
pte
pa
va

mappages

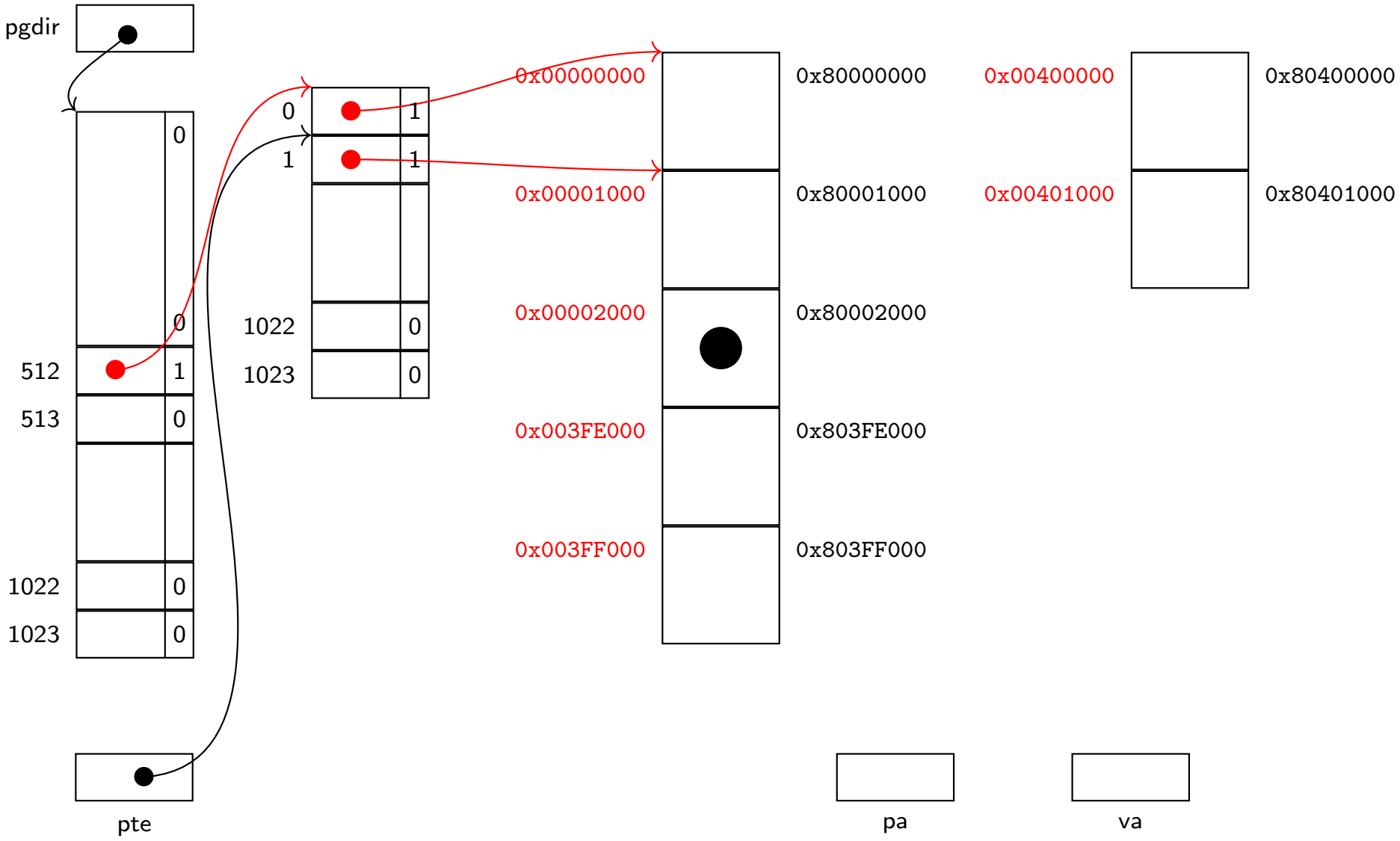
pgdir
0
0
512
1
513
0
1022
0
1023
0
0
1
1
1
1022
0
1023
0
0x00000000
0x00001000
0x00002000
0x003FE000
0x003FF000
0x80000000
0x80001000
0x80002000
0x803FE000
0x803FF000
0x00400000
0x00401000
0x80400000
0x80401000
pte
pa
va

mappages

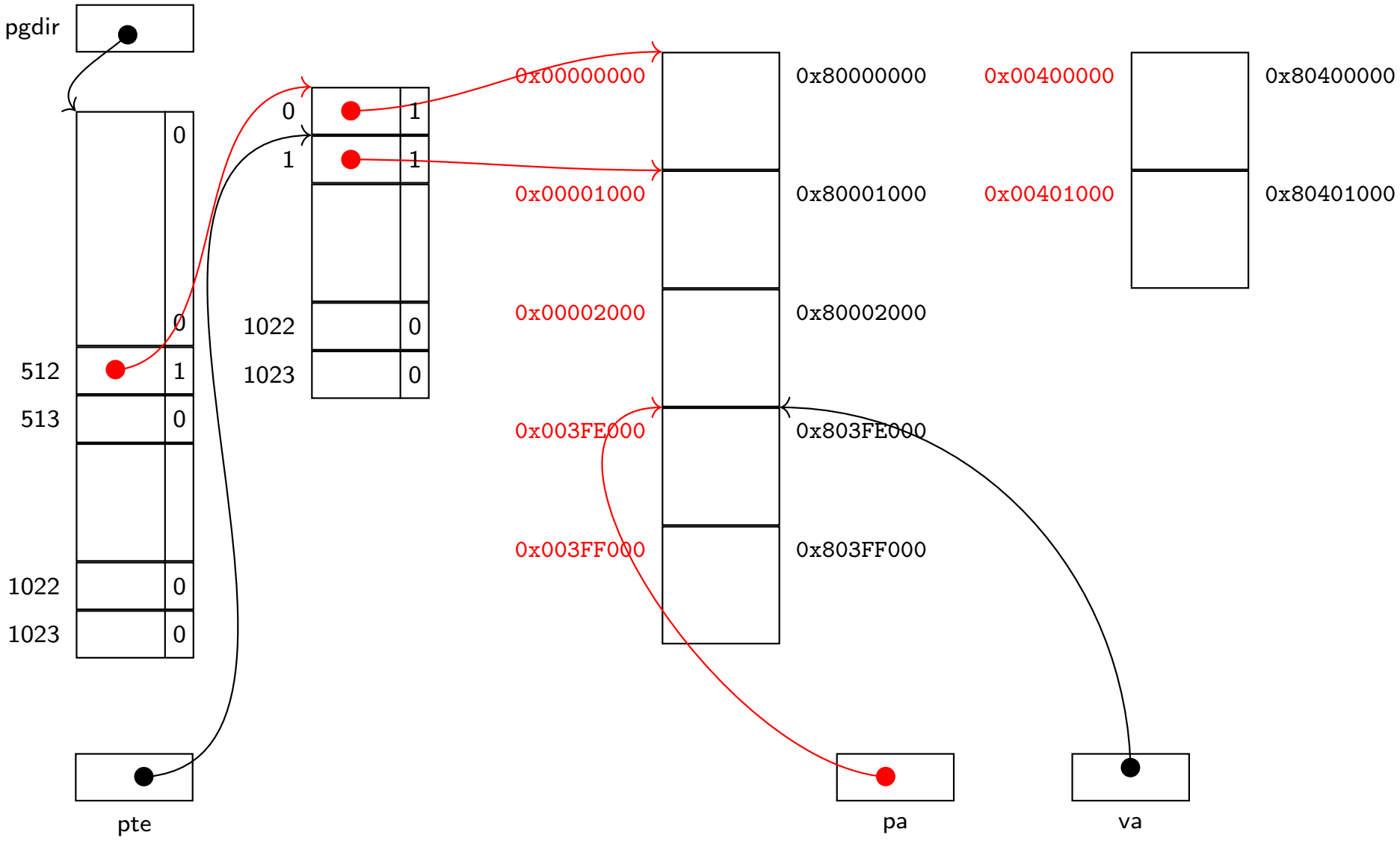
pgdir
0
0
512
1
513
0
1022
0
1023
0
0
1
1
1
1022
0
1023
0
pte
0x00000000
0x80000000
0x00001000
0x80001000
0x00002000
0x80002000
0x003FE000
0x803FE000
0x003FF000
0x803FF000
0x00400000
0x80400000
0x00401000
0x80401000
pa
va

mappages

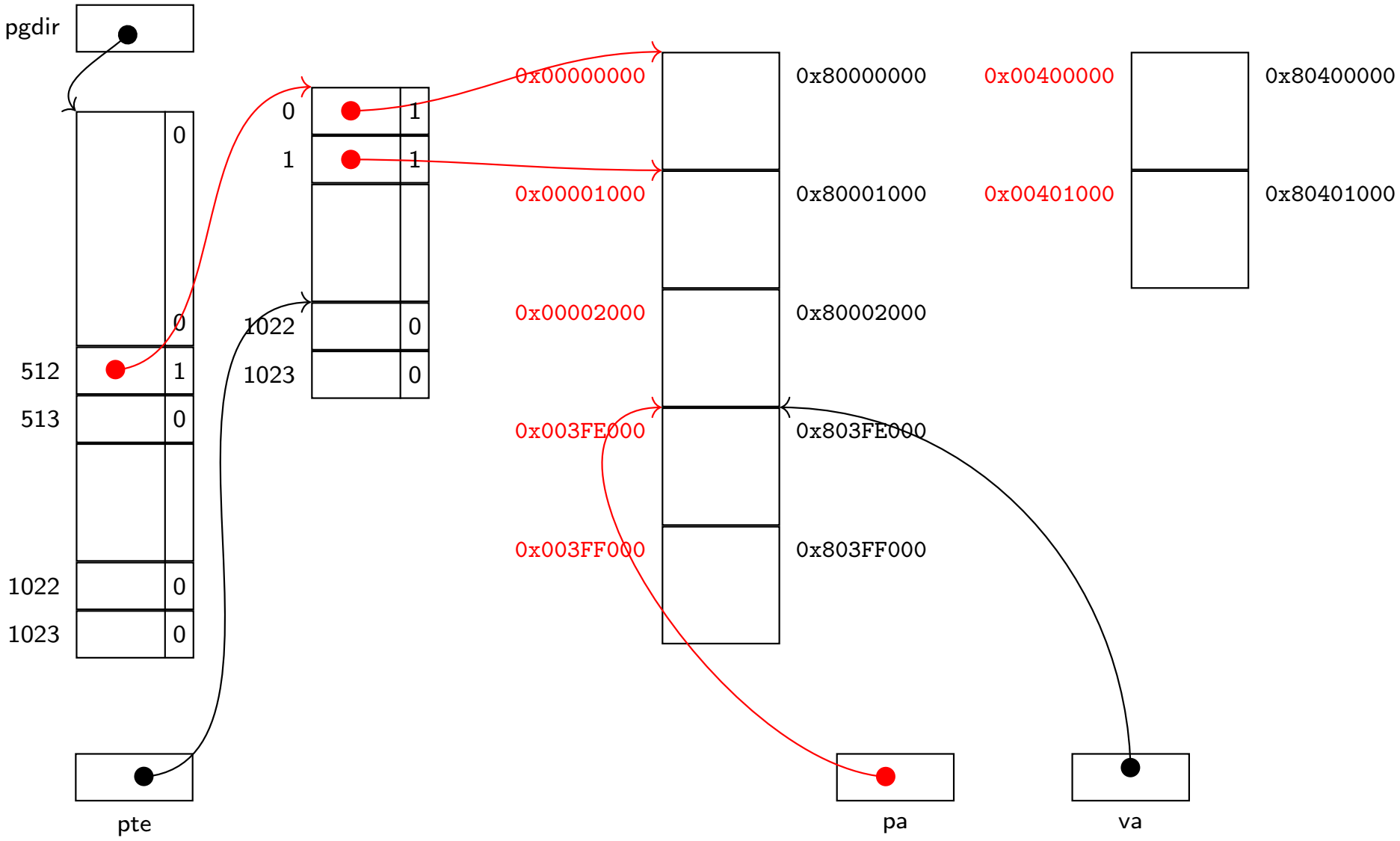
pgdir
0
0
512
1
513
0
1022
0
1023
0
0
1
1
1
1022
0
1023
0
0x00000000
0x80000000
0x00400000
0x80400000
0x00001000
0x80001000
0x00401000
0x80401000
0x00002000
0x80002000
0x003FE000
0x803FE000
0x003FF000
0x803FF000
pte
pa
va

mappages

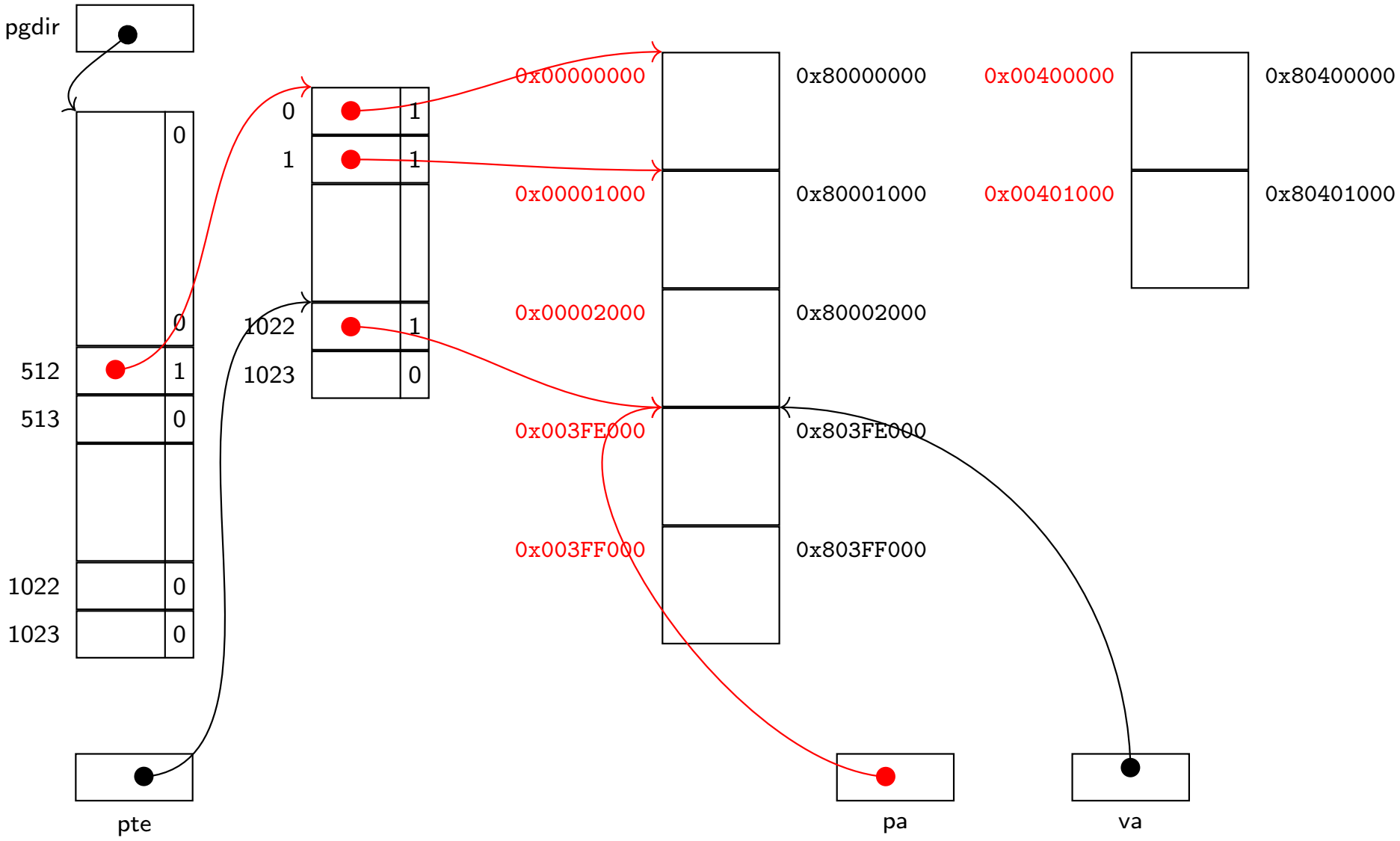
pgdir
0
0
512
1
513
0
1022
0
1023
0
0
1
1
1
1022
1
1023
0
0x00000000
0x80000000
0x00400000
0x80400000
0x00001000
0x80001000
0x00401000
0x80401000
0x00002000
0x80002000
0x003FE000
0x803FE000
0x003FF000
0x803FF000
pte
pa
va

mappages

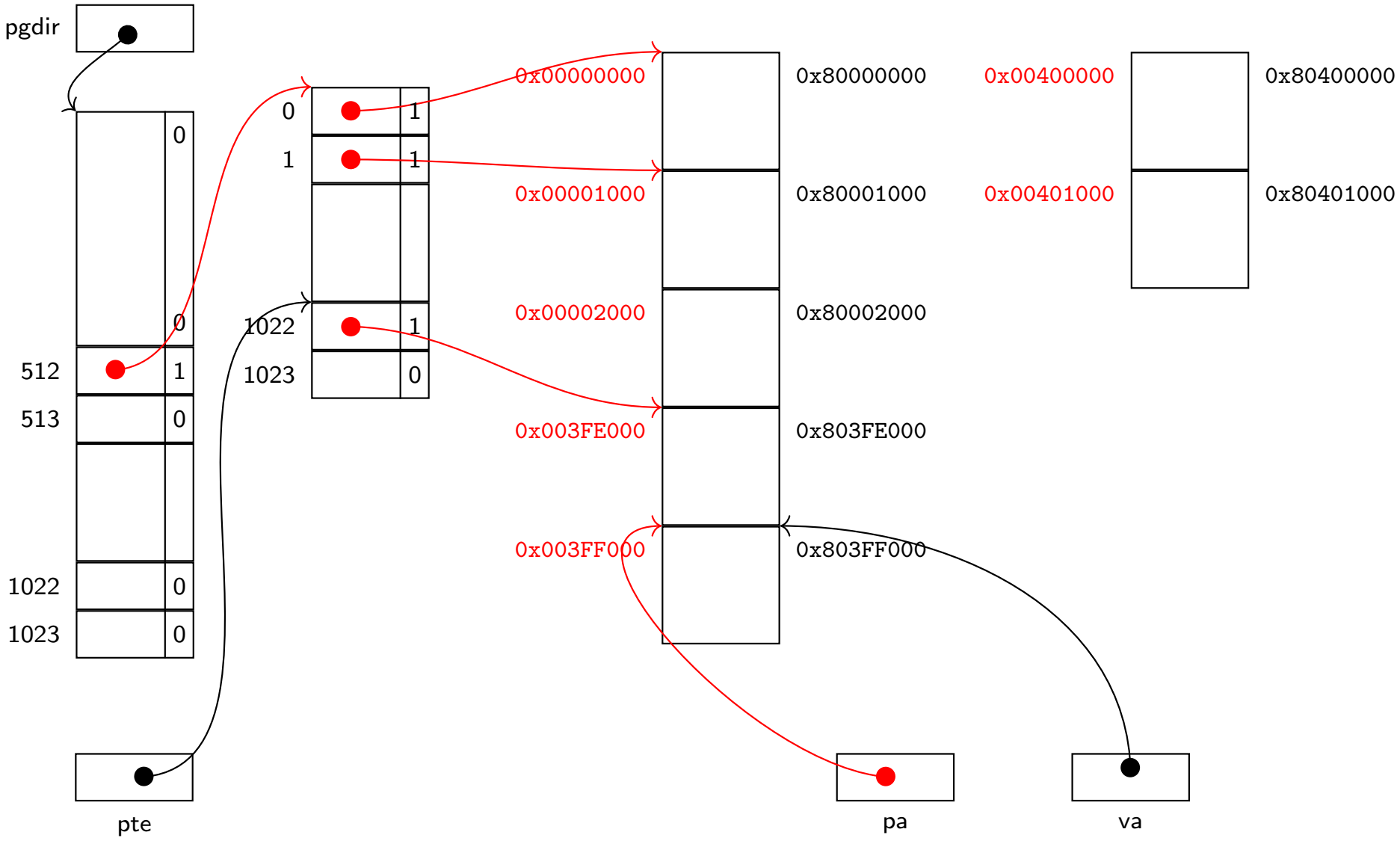
pgdir
0
0
512
1
513
0
1022
0
1023
0
pte
0
1
1
1
1022
1
1023
0
0x00000000
0x00001000
0x00002000
0x003FE000
0x003FF000
0x80000000
0x80001000
0x80002000
0x803FE000
0x803FF000
0x00400000
0x00401000
0x80400000
0x80401000
pa
va

mappages

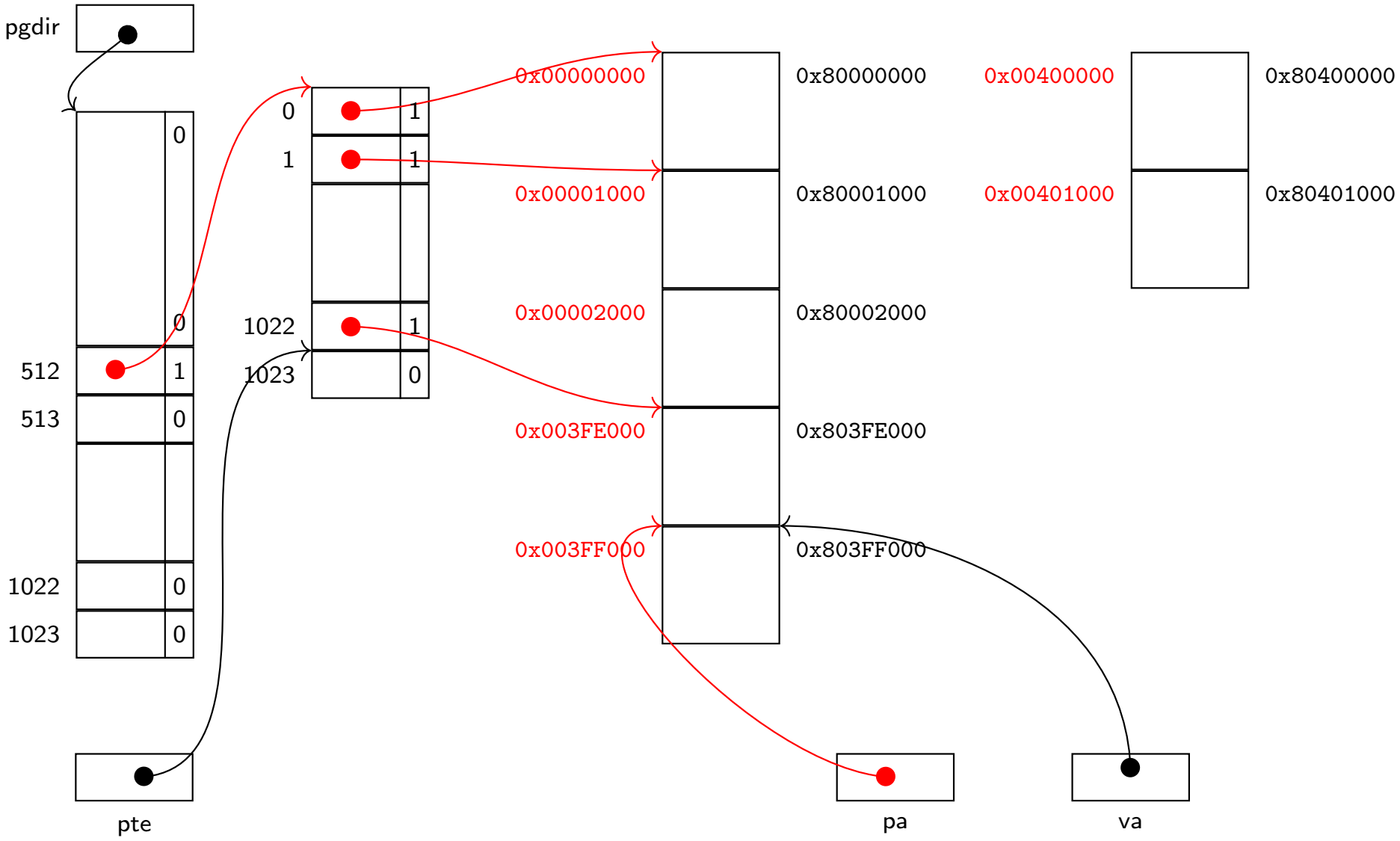
pgdir
0
0
512
1
513
0
1022
0
1023
0
0
1
1
1
1022
1
1023
0
0x00000000
0x00001000
0x00002000
0x003FE000
0x003FF000
0x80000000
0x80001000
0x80002000
0x803FE000
0x803FF000
0x00400000
0x00401000
0x80400000
0x80401000
pte
pa
va

mappages

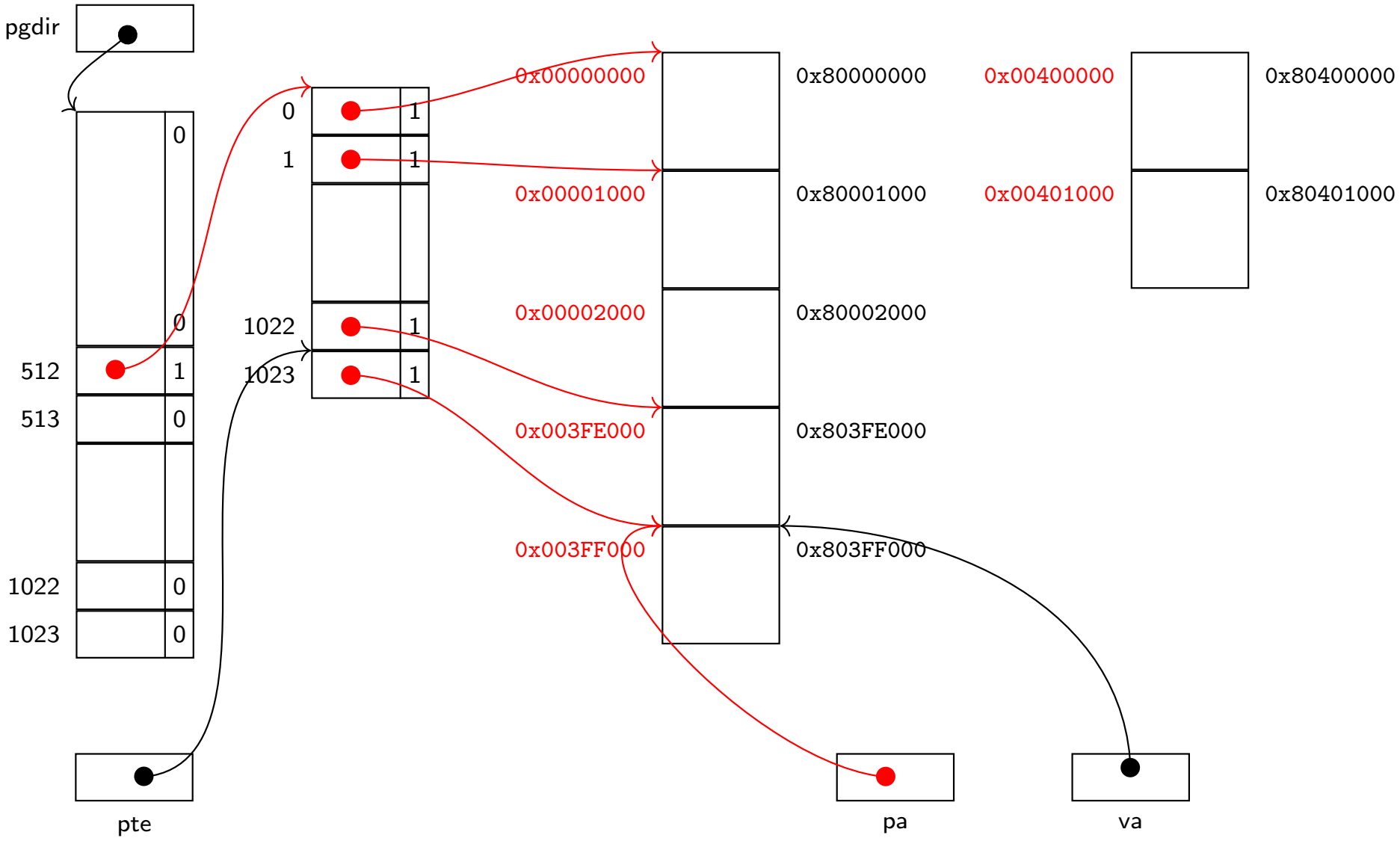
pgdir
0
0
512
1
513
0
1022
0
1023
0
0
1
1
1
1022
1
1023
1
0x00000000
0x00001000
0x00002000
0x003FE000
0x003FF000
0x80000000
0x80001000
0x80002000
0x803FE000
0x803FF000
0x00400000
0x00401000
0x80400000
0x80401000
pte
pa
va

mappages

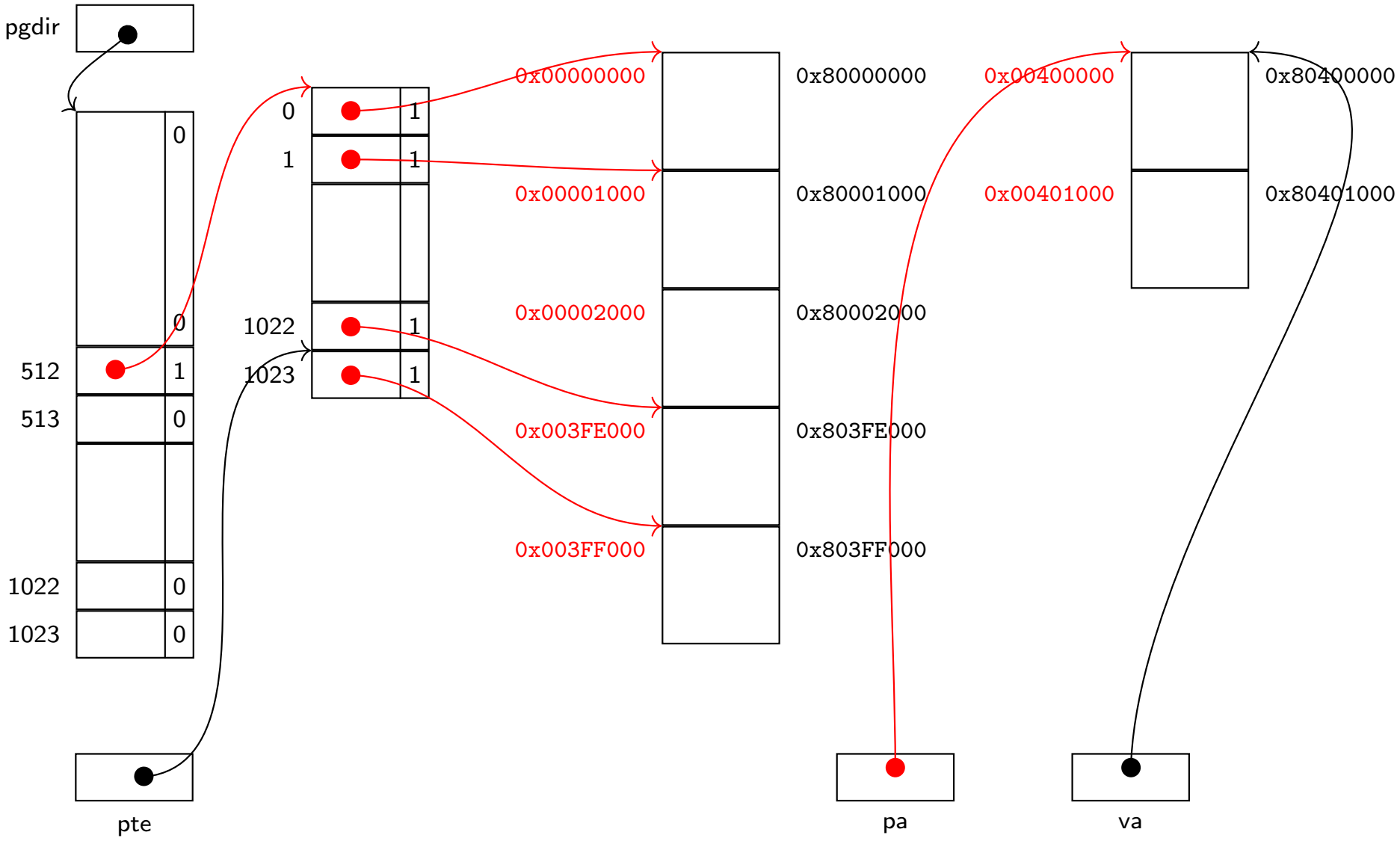
pgdir
0
0
512
1
513
0
1022
0
1023
0
pte
0
1
1
1
1022
1
1023
1
0x00000000
0x00001000
0x00002000
0x003FE000
0x003FF000
0x80000000
0x80001000
0x80002000
0x803FE000
0x803FF000
pa
0x00400000
0x00401000
0x80400000
0x80401000
va

mappages

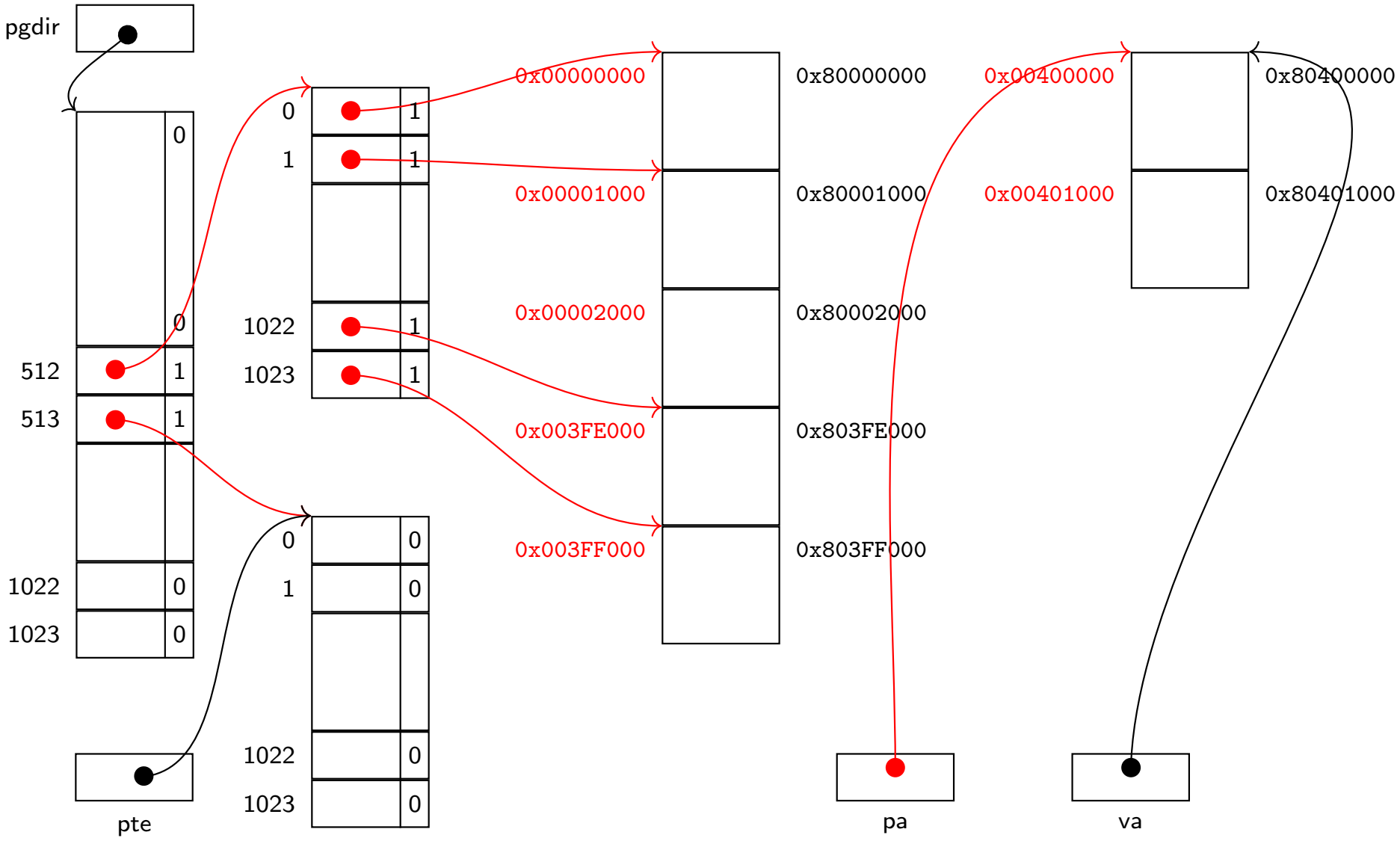
pgdir
0
0
512
1
513
1
1022
0
1023
0
pte
0
1
1
1
1022
1
1023
1
0
0
1
0
1022
0
1023
0
0x00000000
0x00001000
0x00002000
0x003FE000
0x003FF000
0x80000000
0x80001000
0x80002000
0x803FE000
0x803FF000
0x00400000
0x00401000
0x80400000
0x80401000
pa
va

mappages

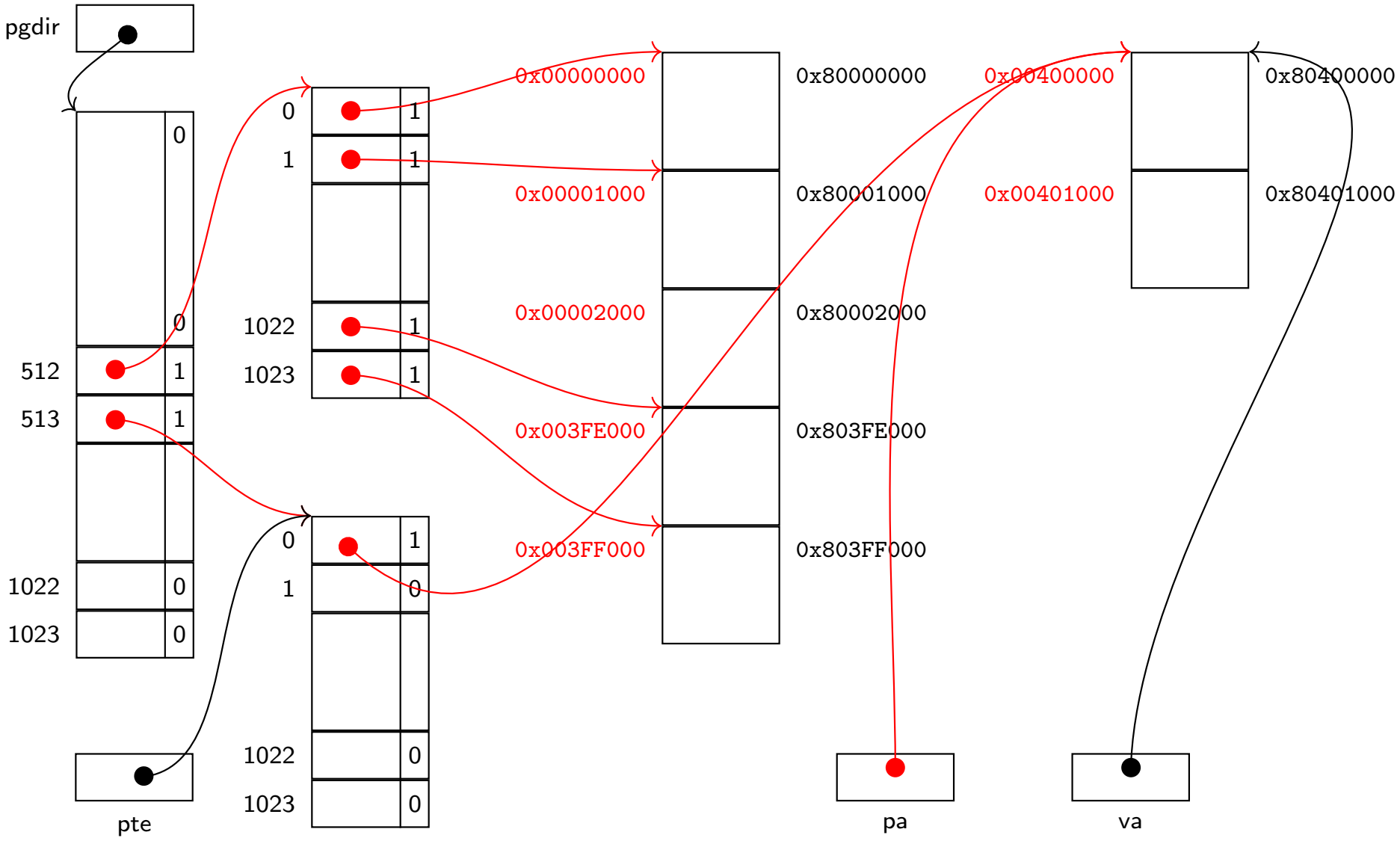
pgdir
0
0
512
1
513
1
1022
0
1023
0
pte
0
1
1
1
1022
1
1023
1
0
1
1
0
1022
0
1023
0
0x00000000
0x00001000
0x00002000
0x003FE000
0x003FF000
0x80000000
0x80001000
0x80002000
0x803FE000
0x803FF000
0x00400000
0x00401000
0x80400000
0x80401000
pa
va

mappages

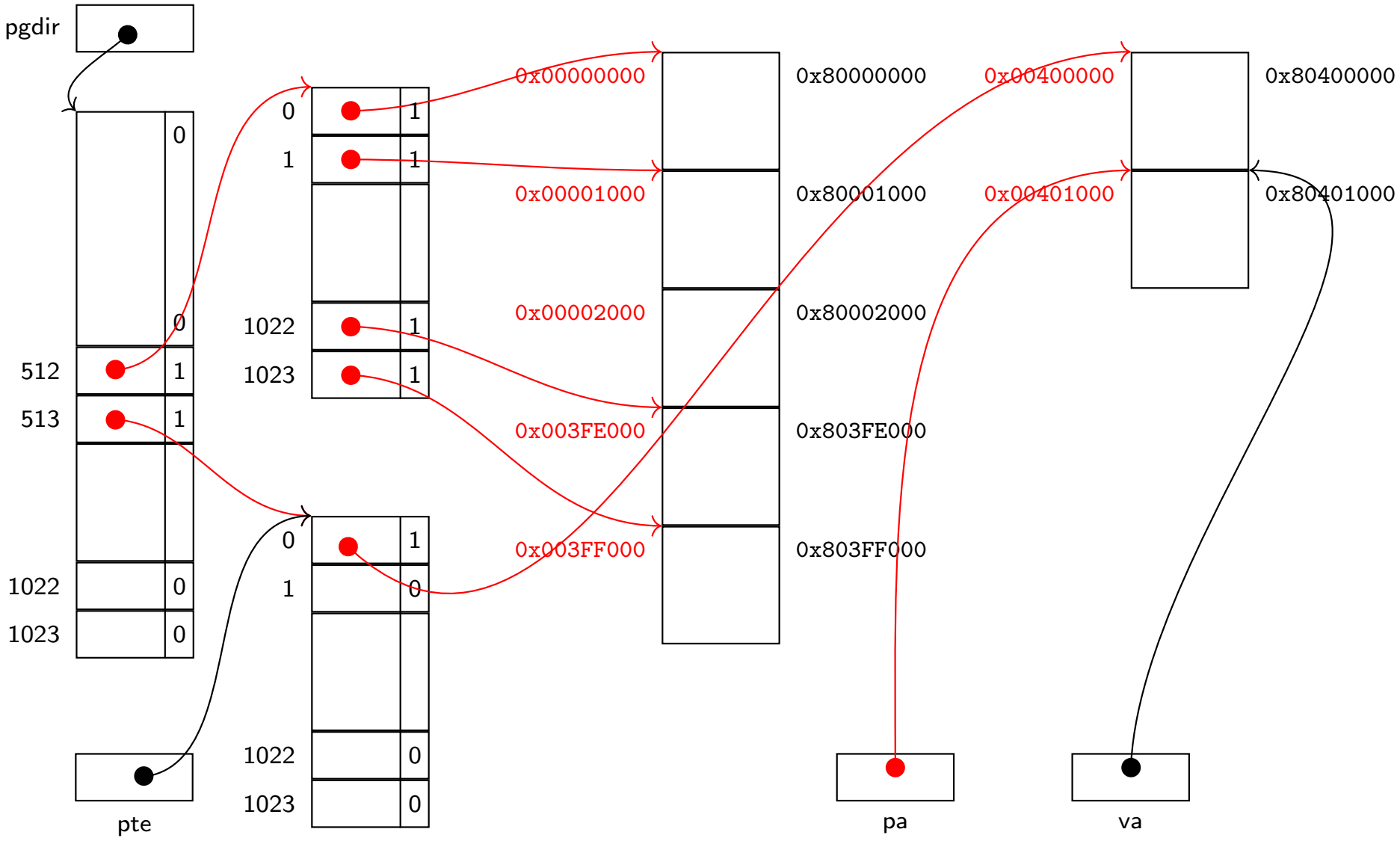
pgdir
0
0
512
1
513
1
1022
0
1023
0
pte
0
1
1
1
1022
1
1023
1
0
1
1
0
1022
0
1023
0
0x00000000
0x00001000
0x00002000
0x003FE000
0x003FF000
0x80000000
0x80001000
0x80002000
0x803FE000
0x803FF000
0x00400000
0x00401000
0x80400000
0x80401000
pa
va

mappages

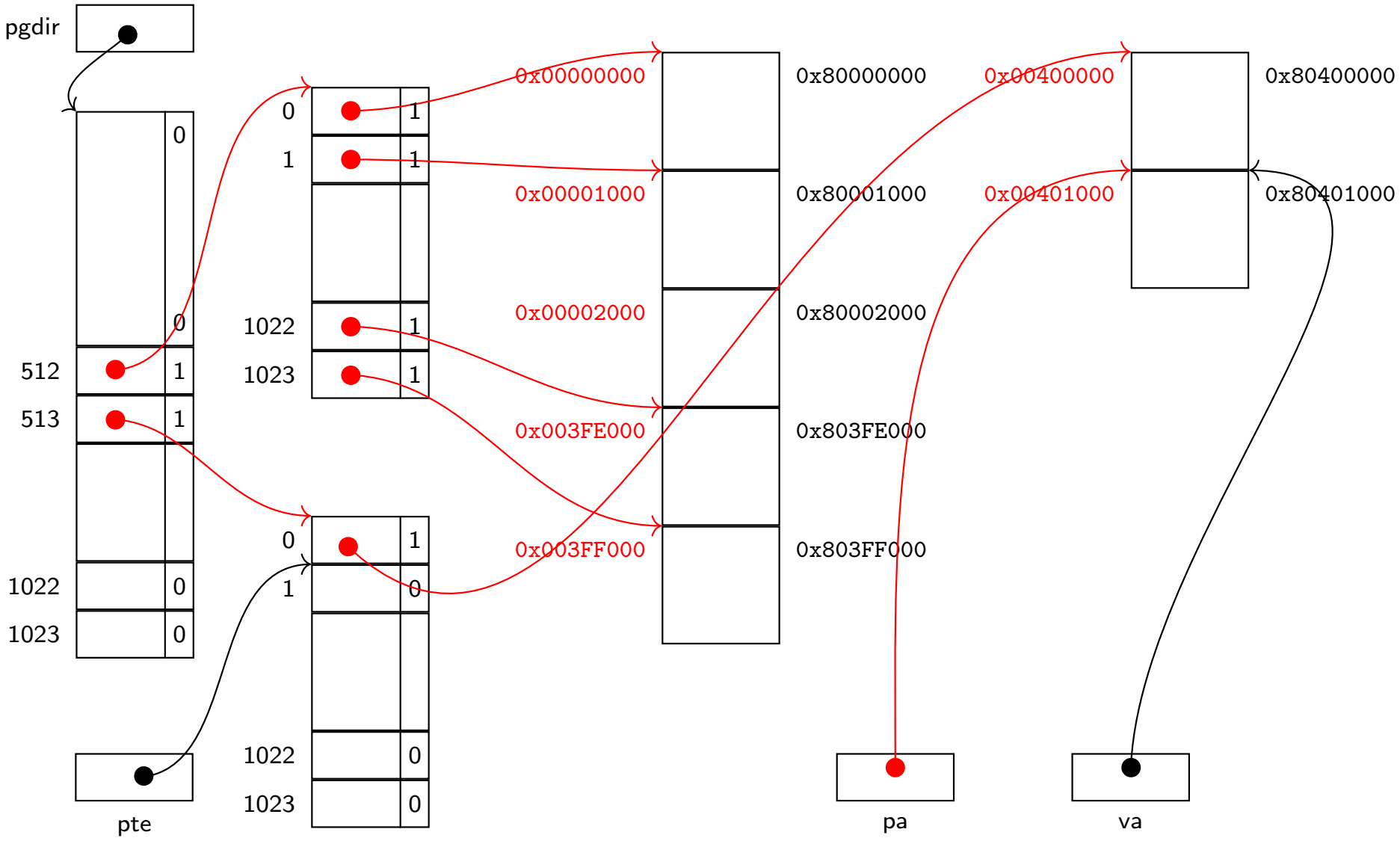
pgdir
0
0
512
1
513
1
1022
0
1023
0
pte
0
1
1
1
1022
1
1023
1
0
1
1
0
1022
0
1023
0
0x00000000
0x00001000
0x00002000
0x003FE000
0x003FF000
0x80000000
0x80001000
0x80002000
0x803FE000
0x803FF000
0x00400000
0x00401000
0x80400000
0x80401000
pa
va

mappages

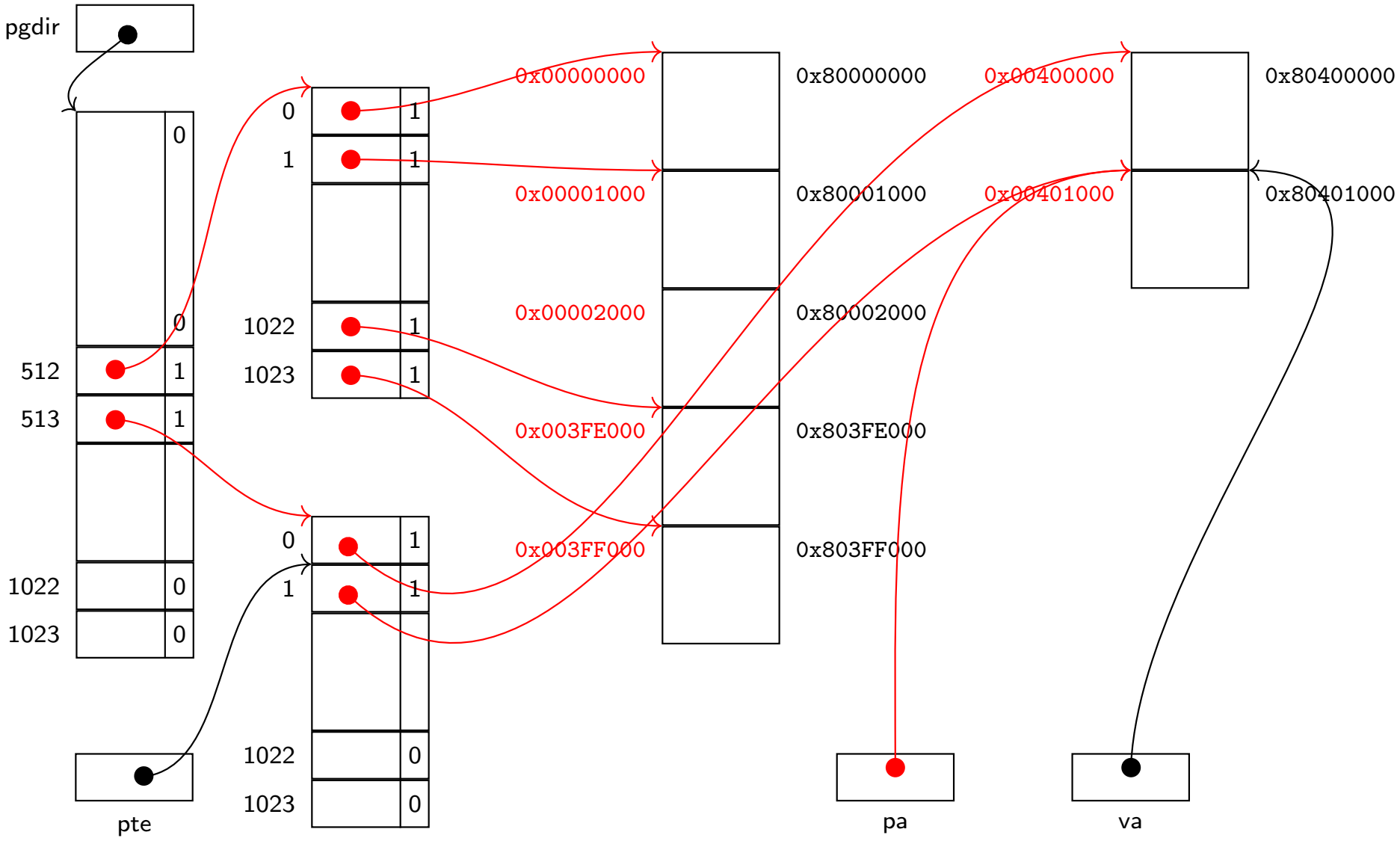
pgdir
0
0
512
1
513
1
1022
0
1023
0
pte
0
1
1
1
1022
1
1023
1
0
1
1
1
1022
0
1023
0
0x00000000
0x00001000
0x00002000
0x003FE000
0x003FF000
0x80000000
0x80001000
0x80002000
0x803FE000
0x803FF000
0x00400000
0x00401000
0x80400000
0x80401000
pa
va

mappages

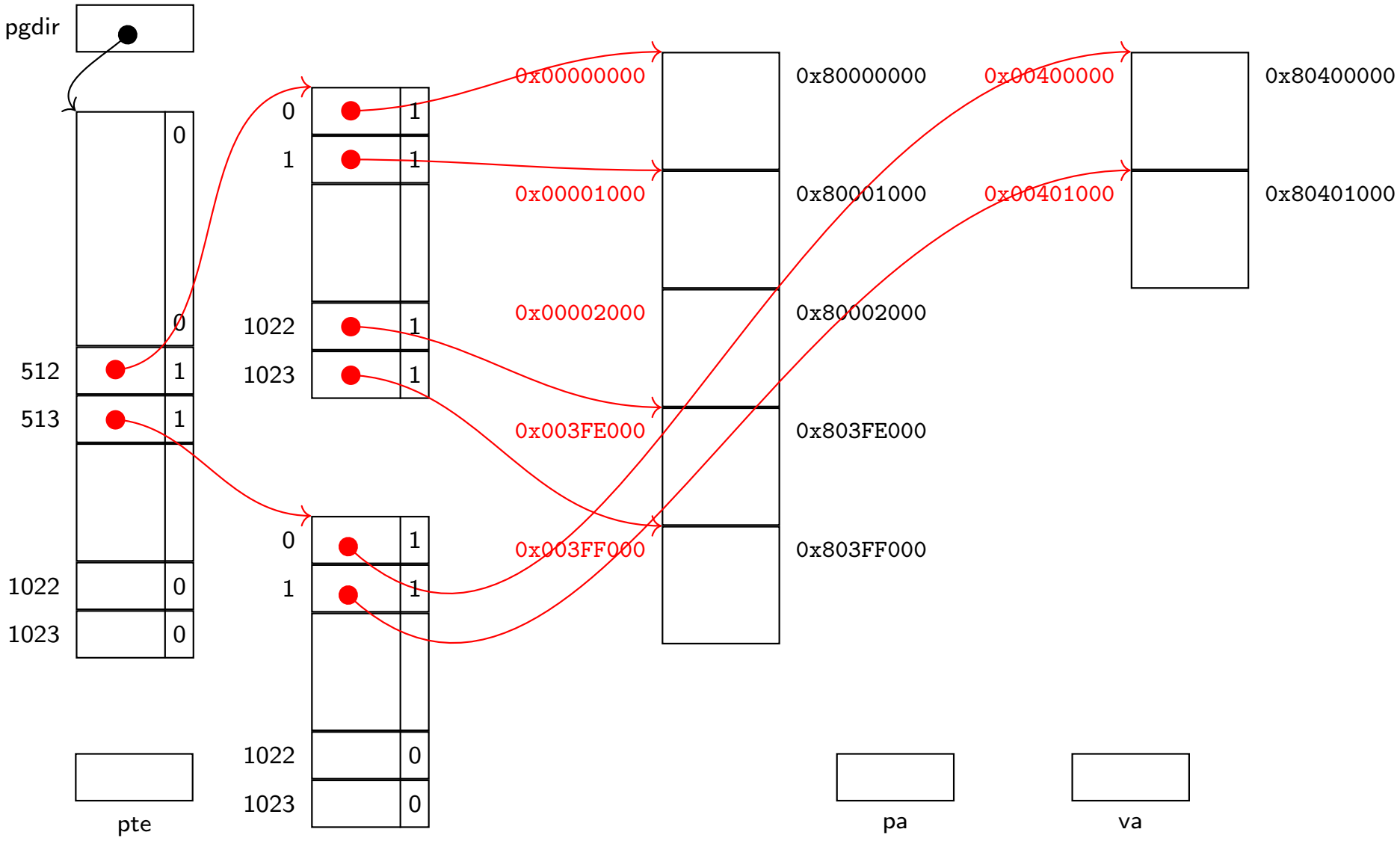
pgdir
0
0
512
1
513
1
1022
0
1023
0
pte
0
1
1
1
1022
1
1023
1
0
1
1
1
1022
0
1023
0
0x00000000
0x00001000
0x00002000
0x003FE000
0x003FF000
0x80000000
0x80001000
0x80002000
0x803FE000
0x803FF000
0x00400000
0x00401000
0x80400000
0x80401000
pa
va

kvmalloc/switchkvm

```
1840 void kvmalloc(void) {
       kpgdir = setupkvm();
       switchkvm();
     }

1853 void switchkvm(void) {
       lcr3(v2p(kpgdir));
     }
```