xv6©-rev10

(Copyright Frans Kaashoek, Robert Morris, and Russ Cox.)

The Boot Sequence

Carmi Merimovich

Tel-Aviv Academic College

March 10, 2017

x86 Power on

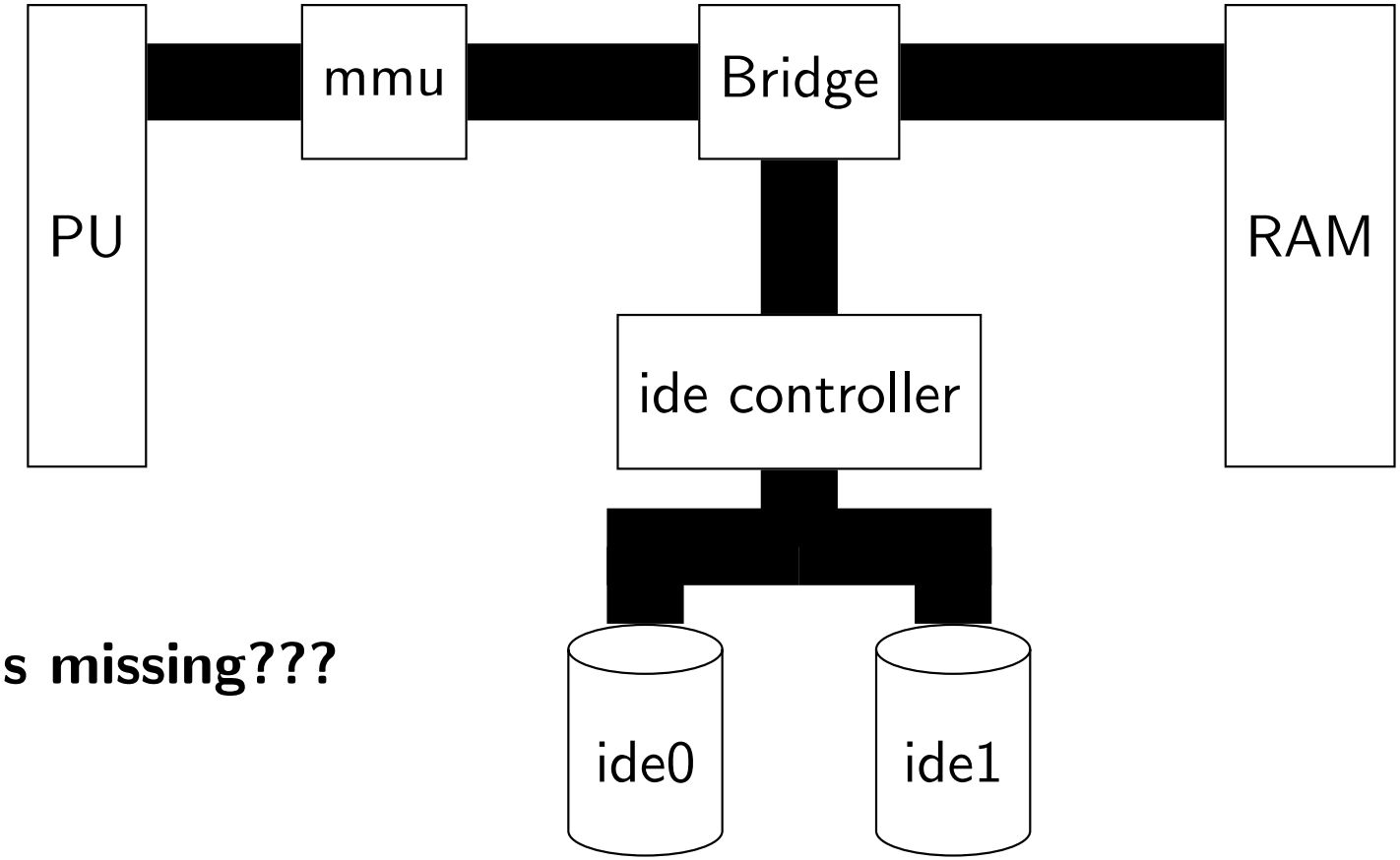

What's missing???

x86 Power on

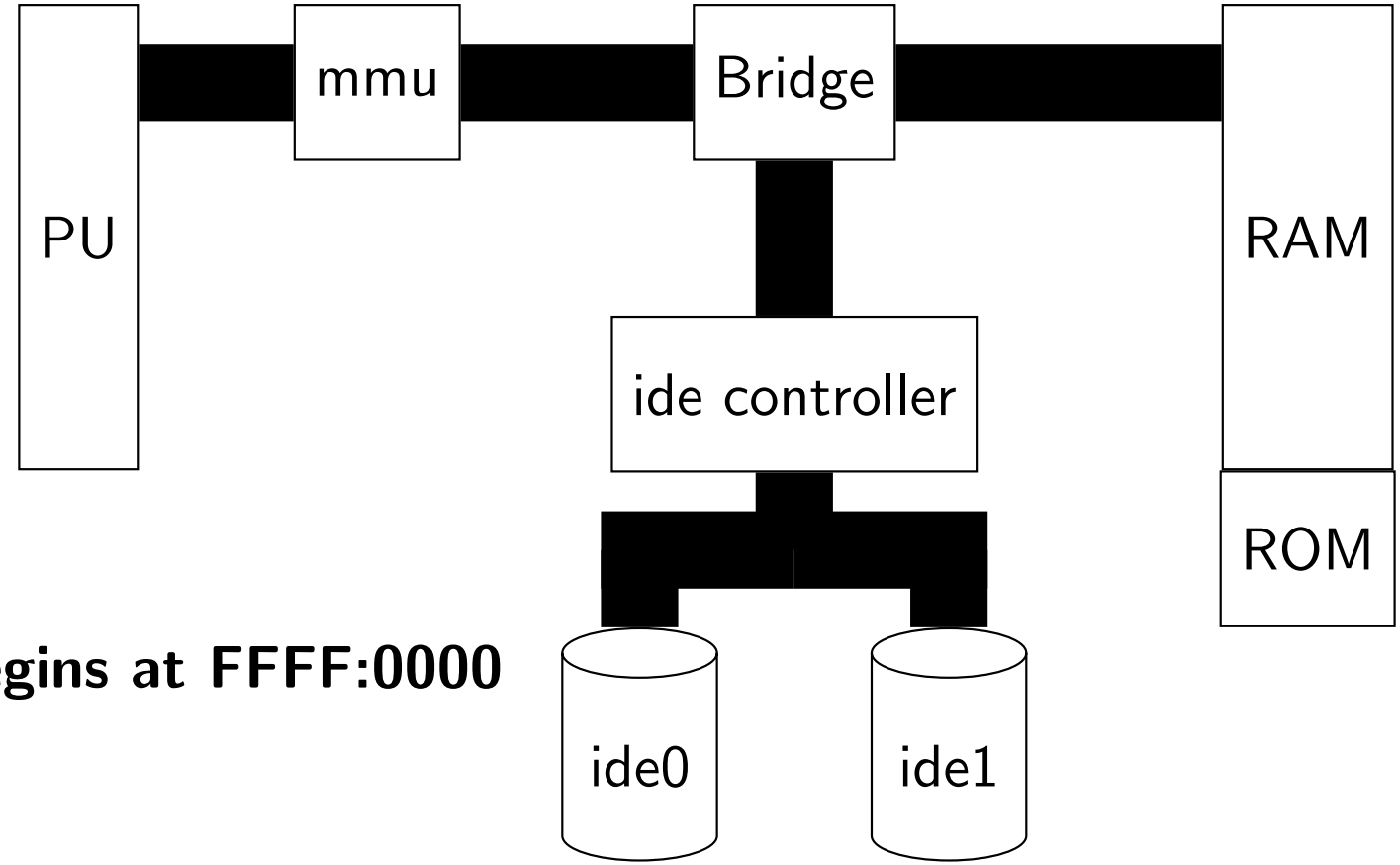

Processor begins at FFFF:0000

Knowledge needed for general booting

- ROM structure (and contents).
- RAM structure.
- ELF structure.
- File system structure.

This is way too much knowledge at this point.

- We will use simplfying assumptions.
- (And) we will not see the code now.

ROM and the Boot Block

- Should ROM code load the kernel into RAM?

ROM and the Boot Block

- Should ROM code load the kernel into RAM?
  - No.
- ROM code loads the **boot block** into RAM.
  - ROM might scan several devices in order to find one with a boot block.
- The boot block is kernel dependent.
- The boot block loads the kernel code, if possible.
  - (elective) Ignoring Lilo, Grub et at.
- Usually the kernel code is a standard executable file.
- Thus the boot block code should know:
  - File system structure.
  - Executable file structure.

Logical disk structure

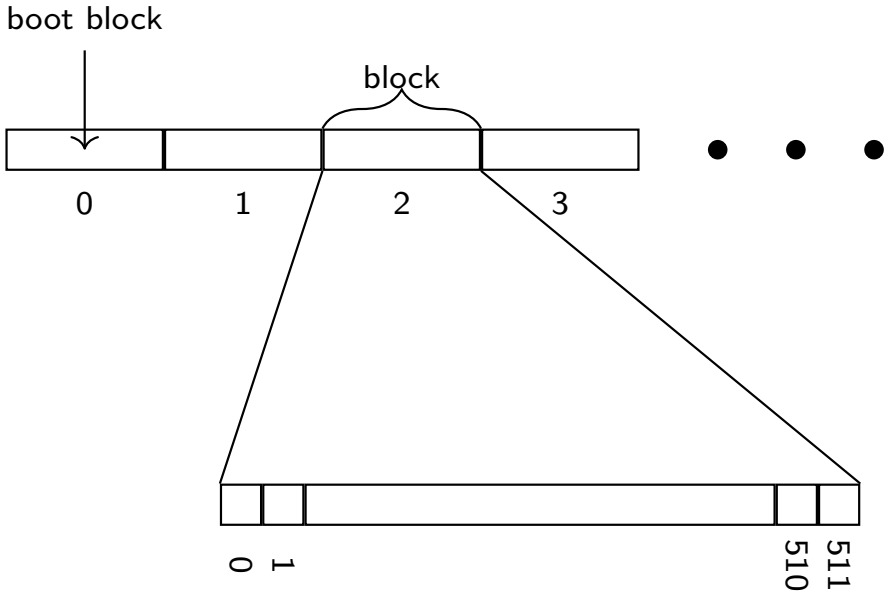

Boot Block Loading by the ROM

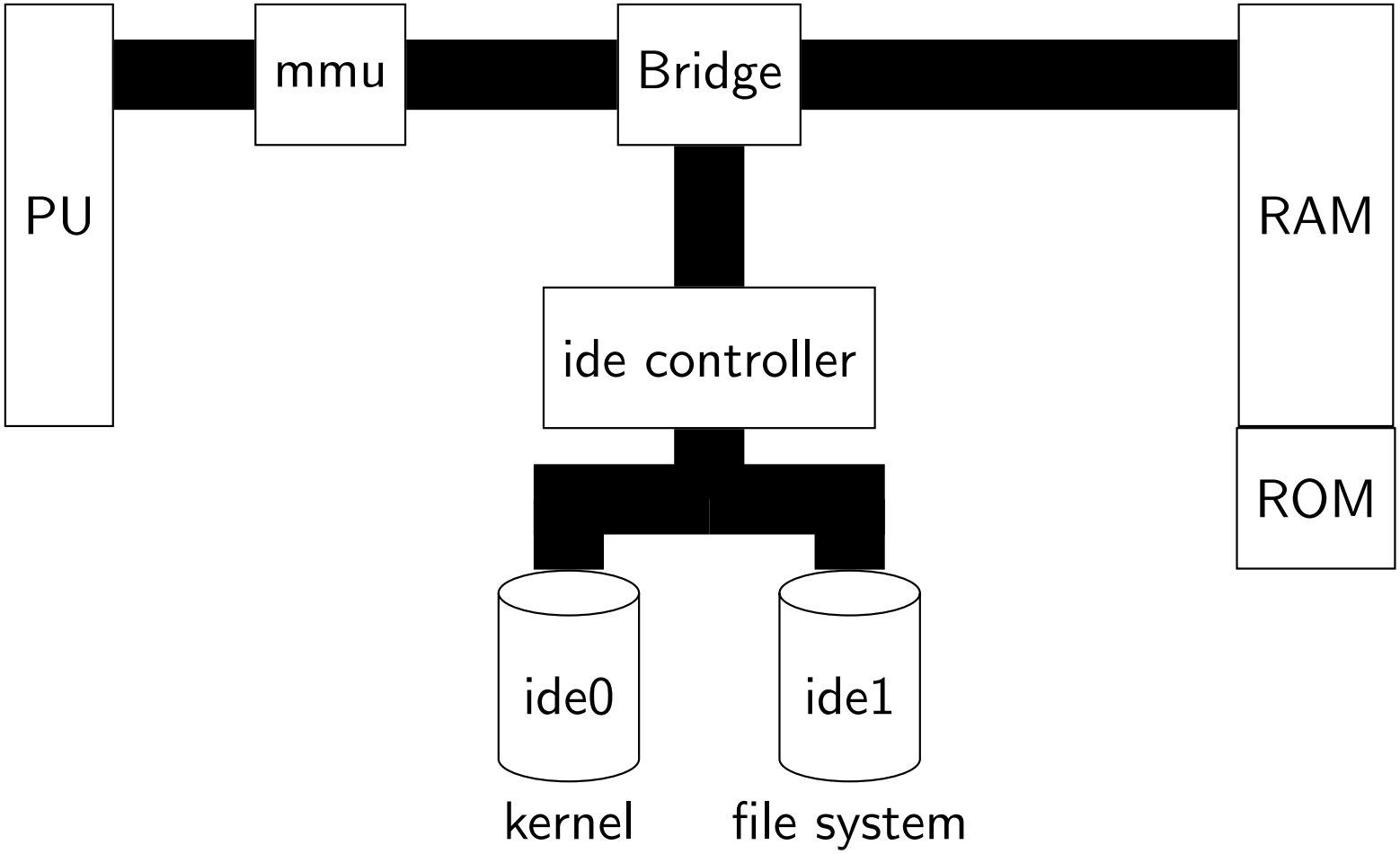

Boot Block Loading by the ROM

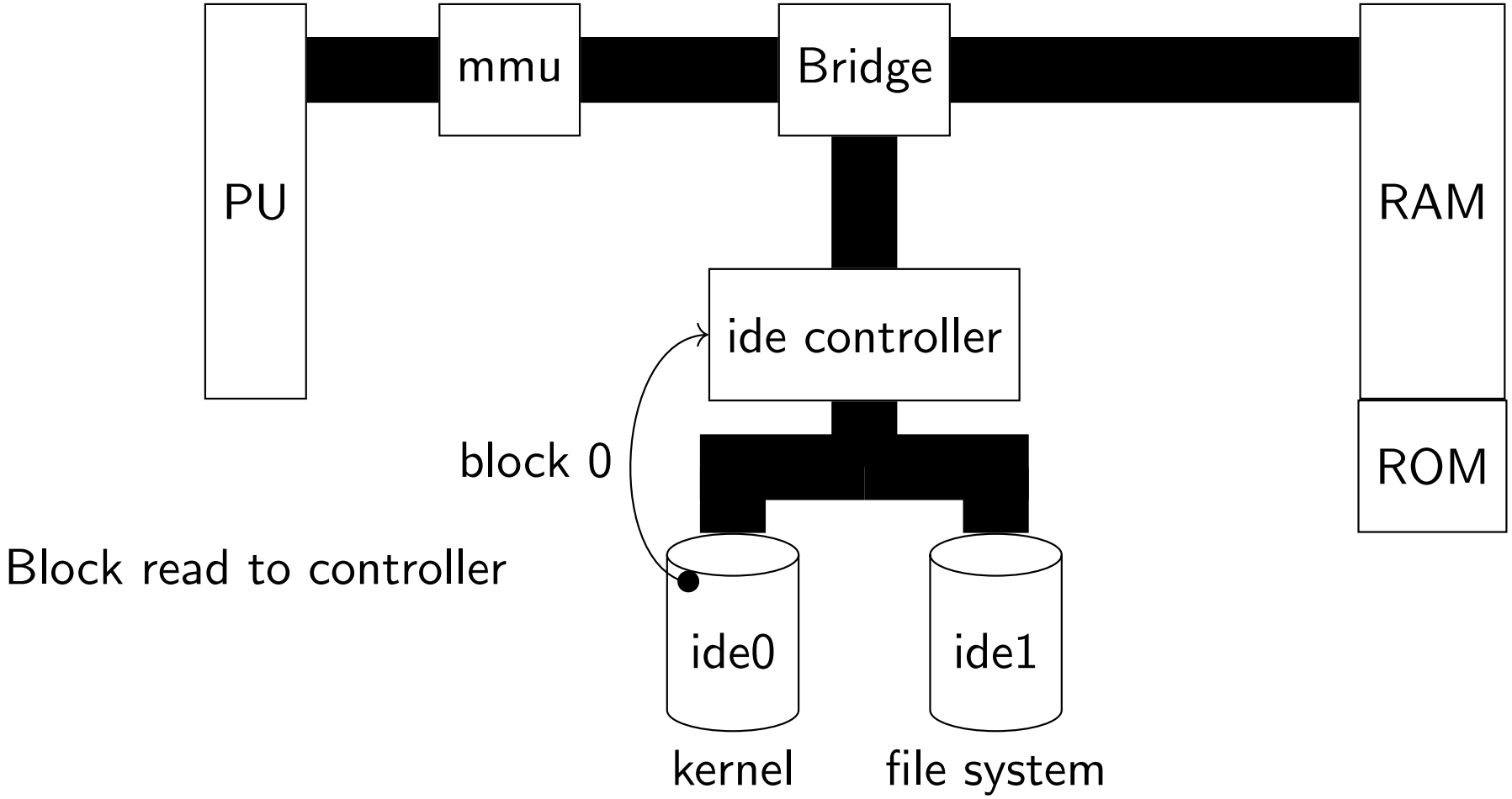

Boot Block Loading by the ROM

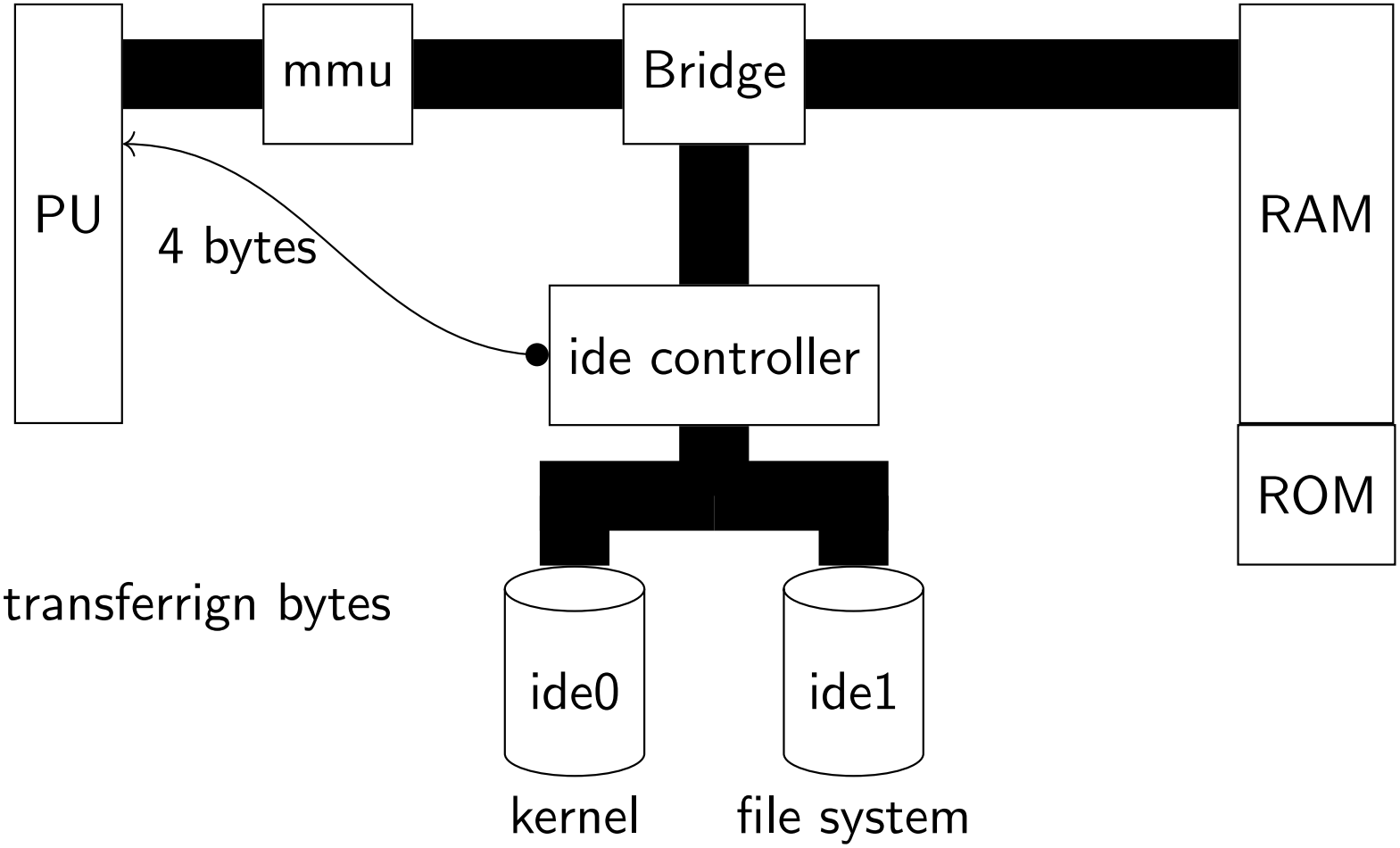

CPU loops transferrign bytes

Boot Block Loading by the ROM

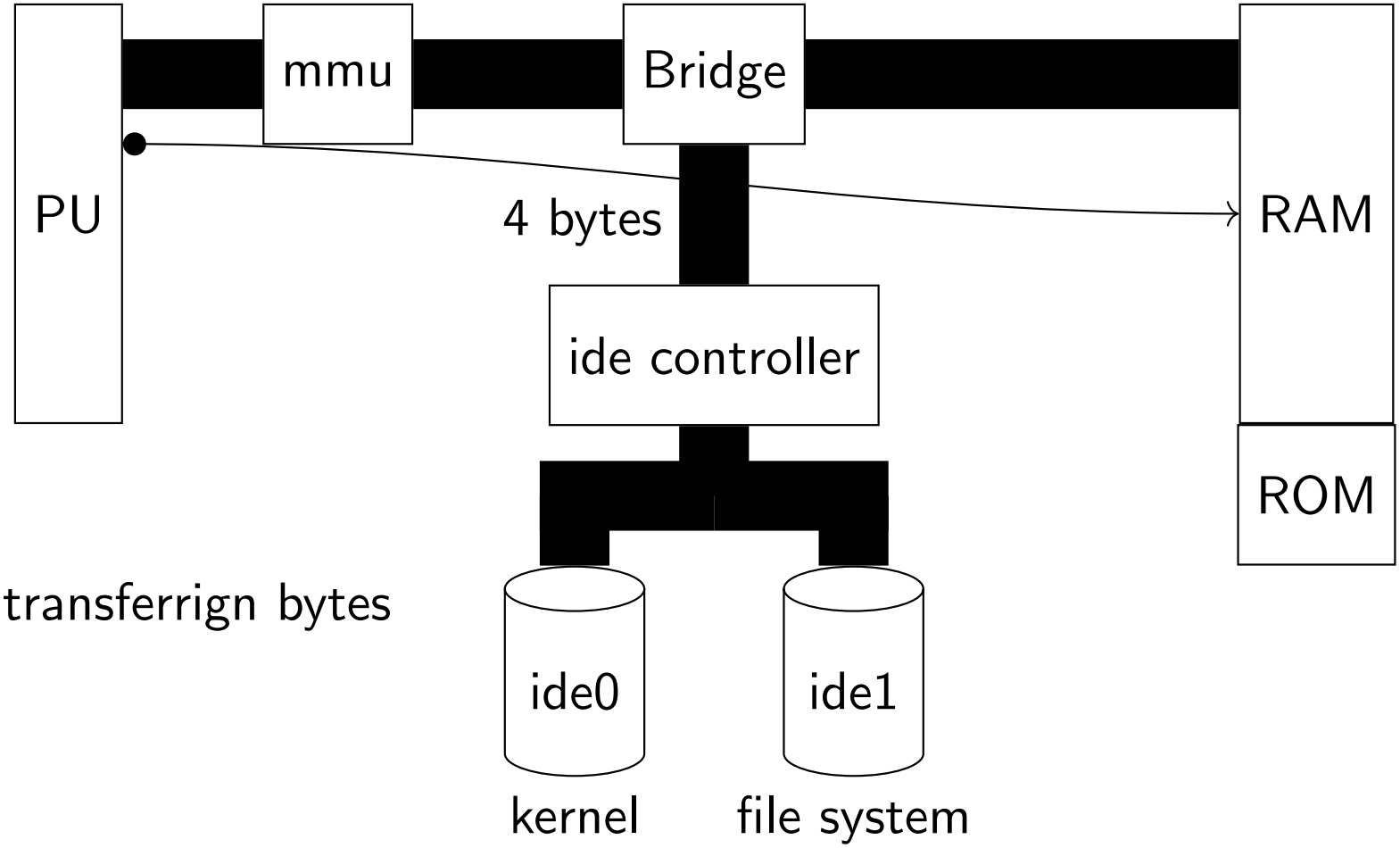

CPU loops transferrign bytes

Boot Block Loading by the ROM

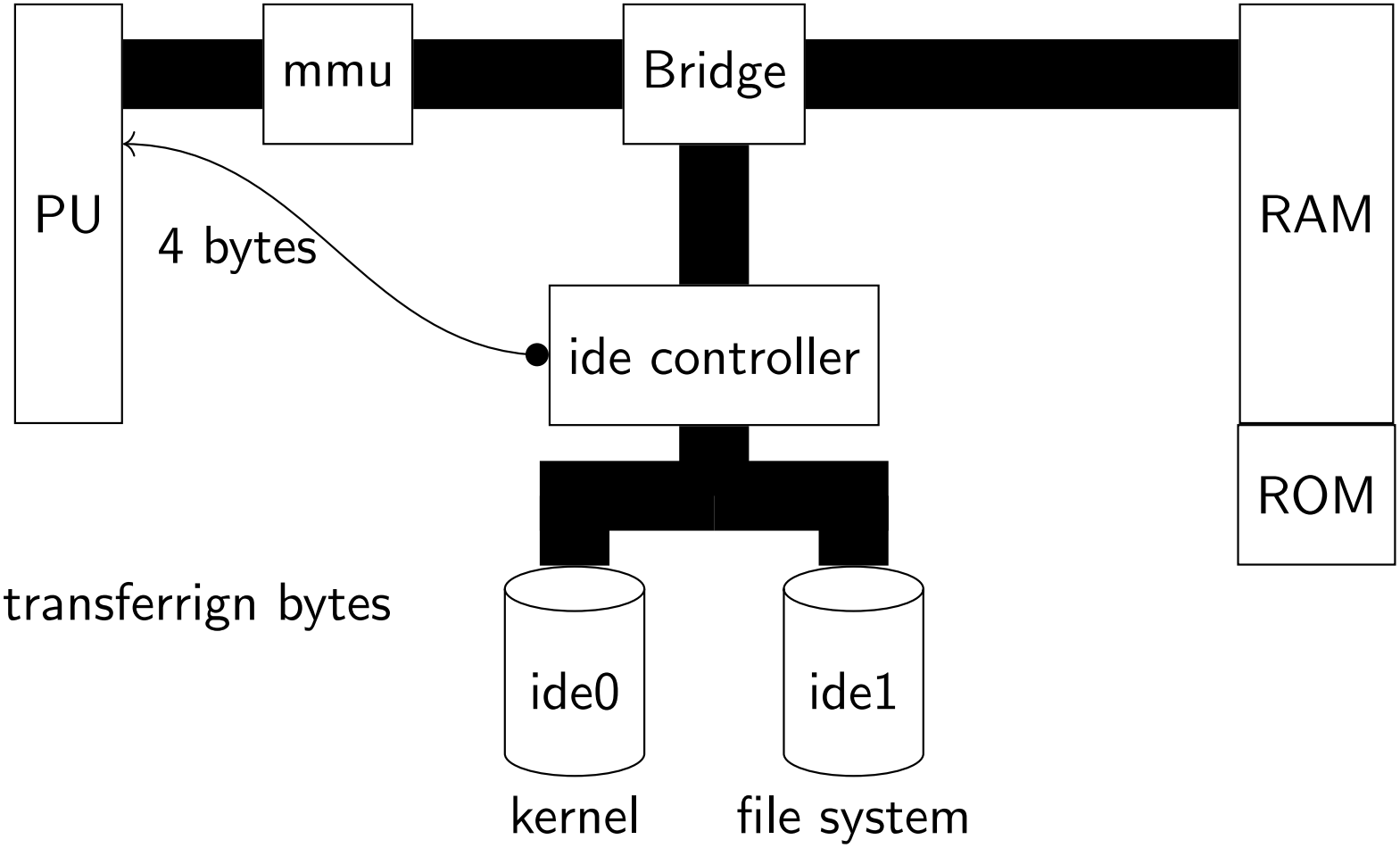

CPU loops transferrign bytes

Boot Block Loading by the ROM

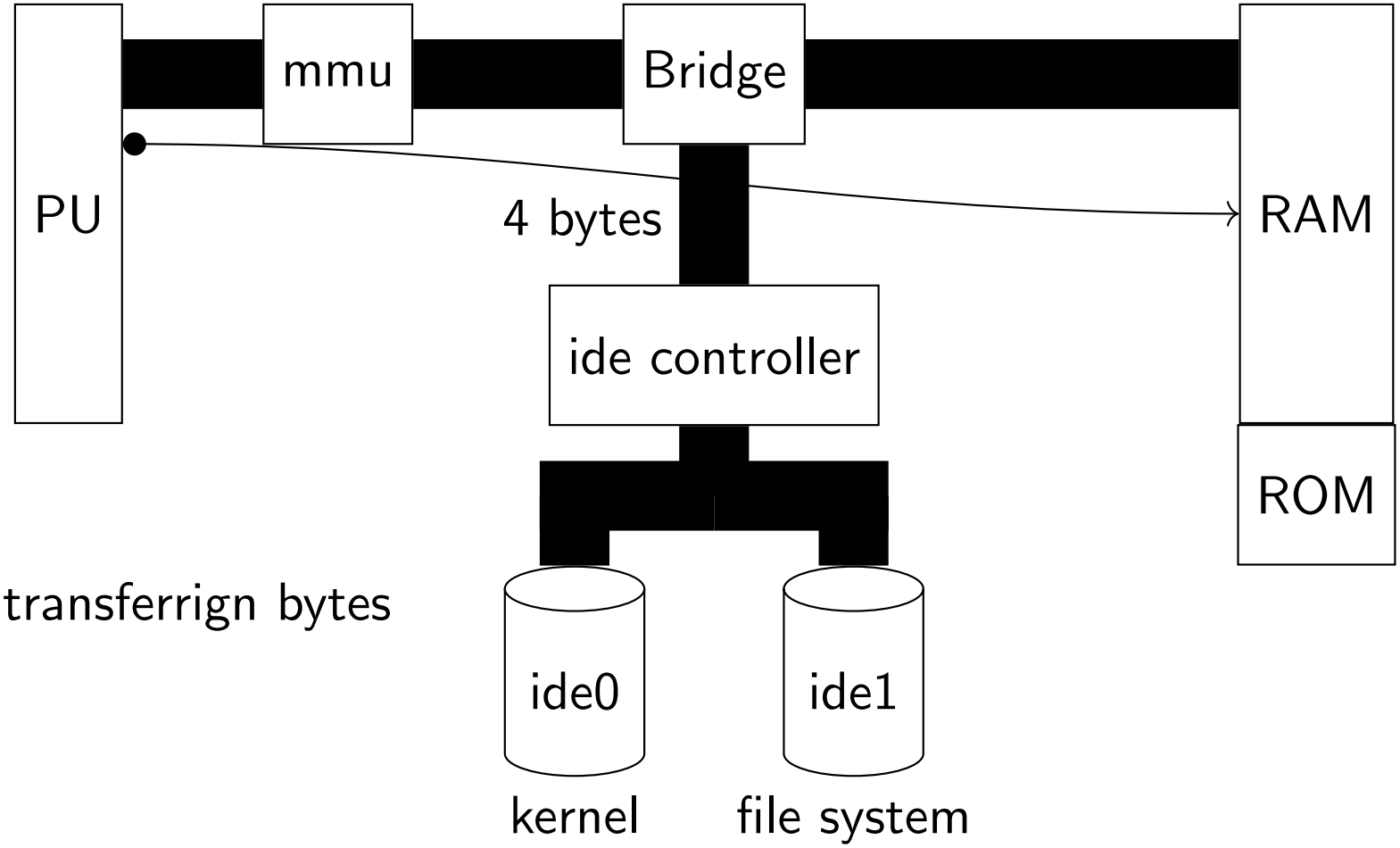

CPU loops transferrign bytes

Birds eye view on getting the kernel

1. POWERUP.
   - Primary processor executes instructions. MMU inactive.
2. ROM code loades 512-bytes boot block to address 0x07C0 and up.
   - ROM terminates by JMPing to address 0x07C0.
3. Boot block code loads the kernel into RAM.
   - Boot block code terminates by JMPing into the kernel's entry point.
   - The entry point address is found at a fixed location in the kernel ELF.
   - Then entry point code is in Assembly and is labeled **entry**.
4. **entry** sets up a temporary kernel programming model.
   - MMU is activated with a table coding the following translation:

$$[\texttt{0x80000000}, \texttt{0x803FFFFF}] \mapsto [\texttt{0x00000000}, \texttt{0x003FFFFF}]$$

   - **esp** is set to the end of a 4KB buffer.
   - **entry** finishes by JMPing into `main`.

x86 ROM code

- Quite complicated, (i.e., BIOS).
- We need one crucial fact:
  - The ROM loads block 0 of the boot device begining with address 0000:07C0.
  - Then the ROM jumps into 0000:07C0.

xv6 Boot block operation

- The boot block loads the xv6 kernel into the RAM.
- It is not feasible in 512 bytes to have code which:
  - Understands ELF structure.
  - Understands the xv6 file system.
  - Puts the kernel code in arbitrary place in RAM.

x86 RAM structure

- Can be quite compilcated.
- **Simplification:** Assume there is RAM at the following addresses:
  - [0x00000000,0x000A0000).
  - [0x00100000,0x0E000000).
- **Simplification:** Load the kernel from address 0x00100000.

xv6 physical memory state after loading

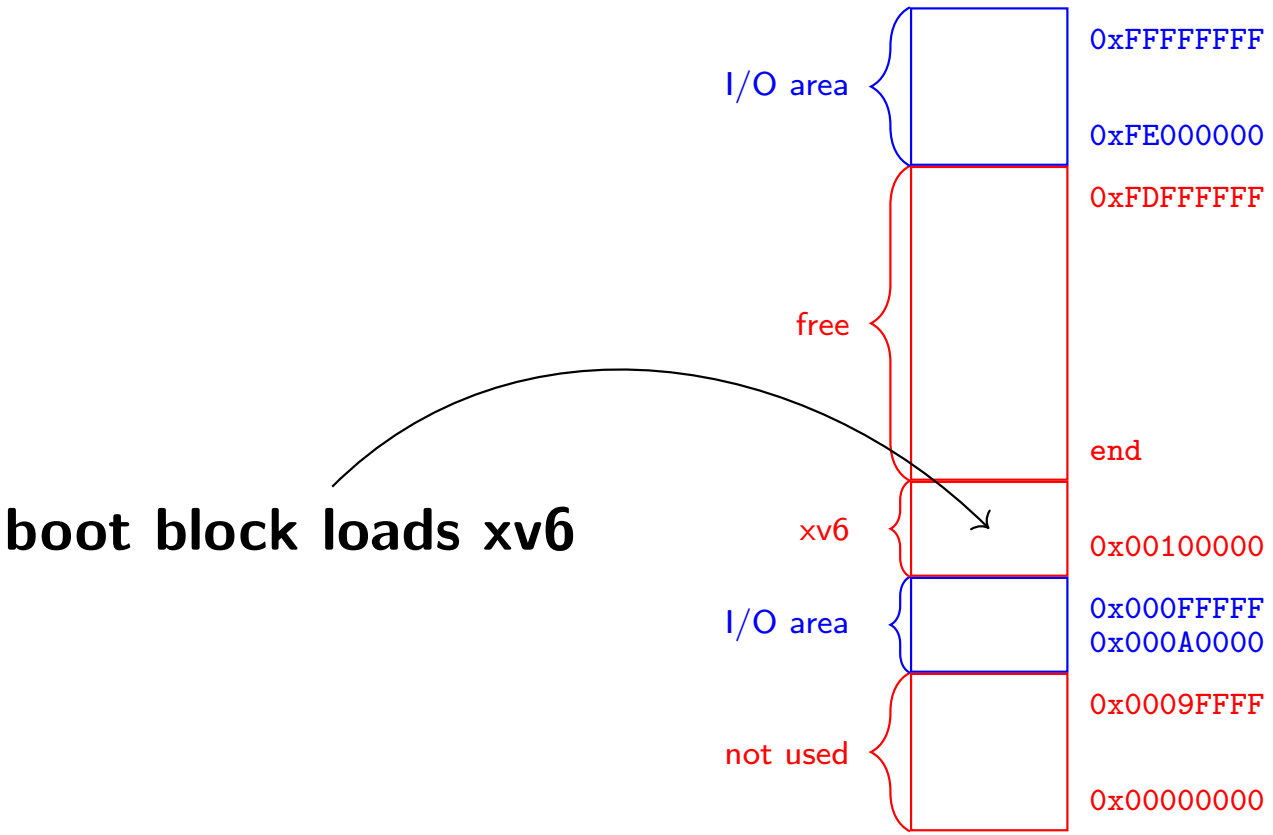

ELF structure

- We have to know the structure of a static ELF.
- We **will** study static ELF structure later in the course.
- Currenly, we will **ignore** the ELF loading code.

File system

- This will be really complicated at this point in time.
- For simplicity, xv6 uses a whole disk (ide0) to hold the kernel.
  - The kernel ELF file begins at block 1 of ide0.
- The real file system, with the OS utilities will reside on ide1.

"disk"s generated by the **makefile**

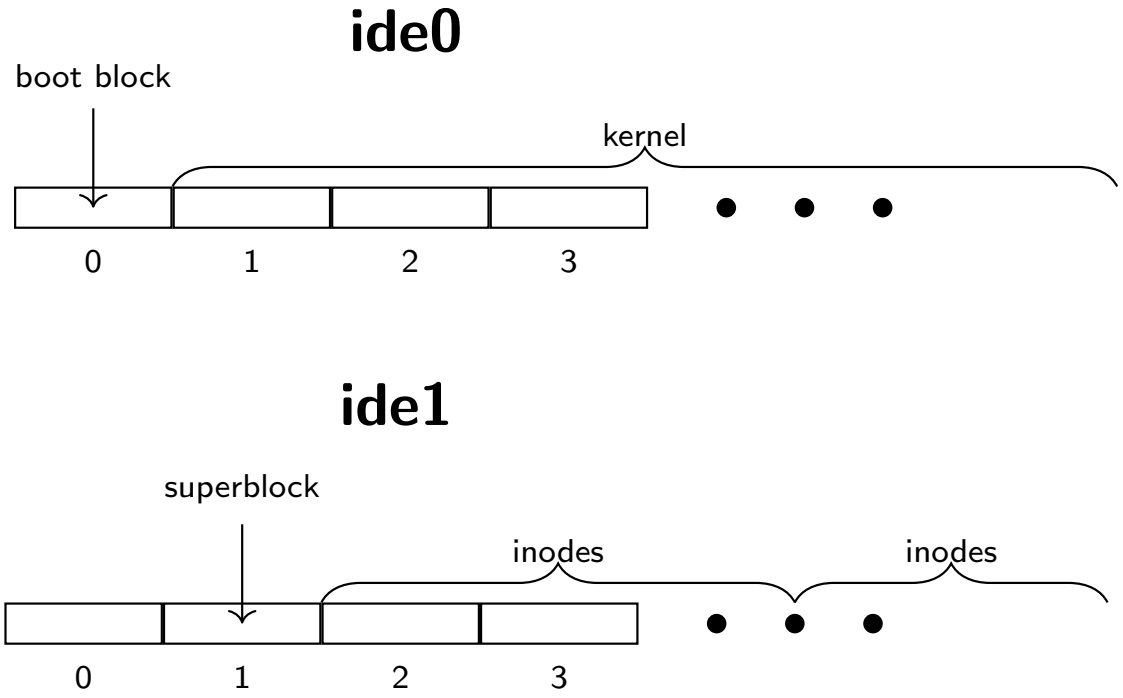

xv6.img and fs.img

```
xv6.img: bootblock kernel
 dd if=/dev/zero of=xv6.img count=10000
 dd if=bootblock of=xv6.img conv=notrunc
 dd if=kernel of=xv6.img seek=1 conv=notrunc

fs.img: mkfs README $(UPROGS)
 ./mkfs fs.img README $(UPROGS)
```