Low Noise Amplifier Design and Analysis

Carlos Solis

December 5, 2025

1 Introduction and Theory

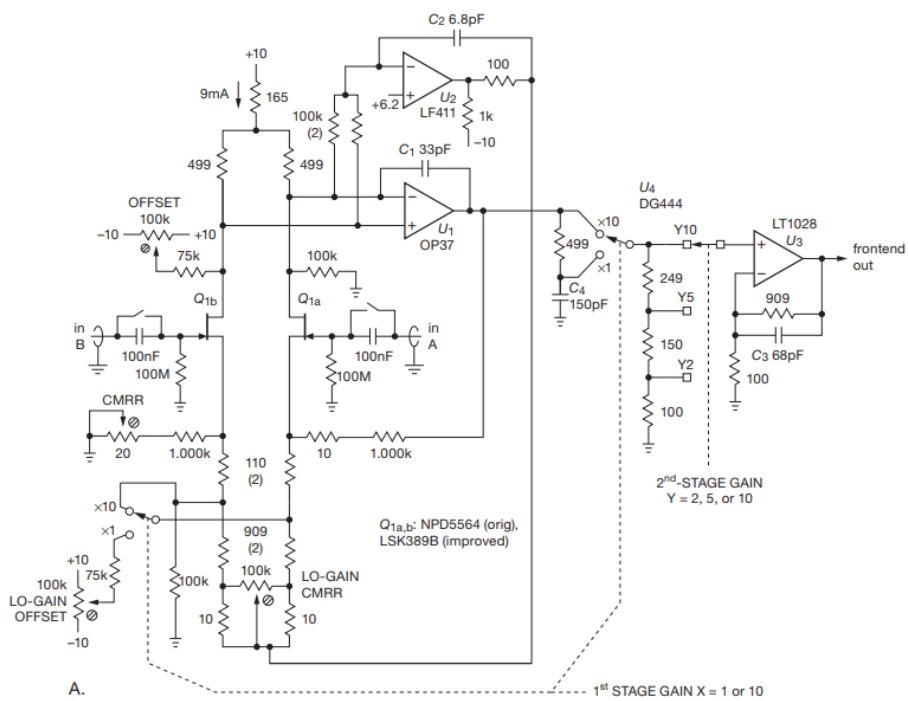

Figure 1: SR560 circuit diagram taken from Horowitz & Hill's *The Art of Electronics*.

The goal of this project is to construct the SR560 low-noise pre-amplifier and to verify that it amplifies signals properly and that its short-circuit input noise closely matches the performance specified in the SRS SR560 specification sheet [1]. The SR560 is a two-stage amplifier as shown in Figure 1.

The first stage of the SR560 is a JFET-input differential amplifier with a gain $X = 1$ or 10. Its purpose is to amplify the voltage difference between the two inputs while rejecting common-mode signals. The offset and CMRR features are included to minimize

DC output and maximize common-mode rejection, respectively. The second stage is a low-noise voltage amplifier with a gain of $Y = 2$, 5, or 10, providing additional gain. This makes the total gain of the circuit $G = XY$.

The techniques used in this project, such as differential amplification, offset adjustments, and CMRR adjustments, are essential for accurately measuring signals in the microvolt range.

To compute the short-circuit input noise voltage, we use the relationship between the input and output voltage:

$$V_{in} = \frac{V_{out}}{G} \tag{1}$$

2 Methods and Results

2.1 Methods

It's important to note that we decided to modify our version of the SR560 by fixing both gains X and Y to 10. This makes it so that the LO-GAIN OFFSET and LO-GAIN CMRR aren't needed. However, we still decided to include these features in the circuit so that we wouldn't have to redesign the circuit. We also swapped the OP37 and the LT1028 op amps for the OPA227P. The reason for this was that the components of the SR560 shown in Figure 1 were chosen under the impression that the circuit would be constructed using something much more sophisticated than a breadboard, like a PCB with low parasitics. When implemented on a breadboard, the higher bandwidths of the OP37 and the LT1028 become prone to oscillations and excess noise due to stray capacitances and inductances in the wiring. The OPA227P is more tolerant of parasitic loading, minimizing these problems for us.

For the construction of the circuit, we used the PB-505A protoboard. This protoboard has two variable voltage sources that we set to +10V and -10V to use for the op amp supply voltages and the voltage sources shown in the circuit. For the resistor material, we chose metal film because it's fairly inexpensive and good enough for reducing noise.

Once we constructed the circuit, the next step was to calibrate the OFFSET and the CMRR. What we want is the DC OFFSET to be set to 0V when the differential is 0 ($V_B - V_B = 0V$). This makes it so that the output signal amplifies the true differential without any DC OFFSET voltage added. To calibrate the OFFSET, we first shorted the inputs (connected them to each other) and observed the output signal on an oscilloscope. Then we adjusted the offset so that the output signal was as close to 0V as possible.

We also want to adjust the CMRR to ensure that the first-stage amplifier only responds to the voltage difference between the two inputs and not to any signal that appears identically on both due to environmental noise. We shorted the inputs again, but this time we used a function generator to supply a sine wave signal with an amplitude of about $100mVpp$ and a frequency of $1kHz$ to both inputs. Then we observed the First-stage output, not the second stage. What we expected to see was a sine wave. Our goal was to make this sine wave as small as possible. Ideally, it should reduce to noise.

One last thing that we did to reduce unwanted noise is to add a bandwidth low-pass filter for our output measurement to reduce the noise above $2MHz$.

Now that both the OFFSET and CMRR are properly calibrated, and noise is reduced as much as possible, we can make measurements. We made measurements by inputting a DC or AC signal to input B, connecting input A to ground, and then observing the output signal.

2.2 Results

To show that our SR560 low-noise amplifier works, we must demonstrate the following: our circuit amplifies a signal by 100, and that the input noise closely matches that of a standard SR560 Stanford Research Systems model. Figure 2 shows an input signal that is a 68 $mVpp$ sine wave at a frequency of $99.86kHz$, and the amplified output signal with a peak-to-peak value of $6.960Vpp$. This corresponds to a gain of exactly 102.35. The reason the gain isn't exactly 100 is that the OFFSET could not be set to exactly zero, which is expected. The residual DC offset is then amplified and added to the output signal.

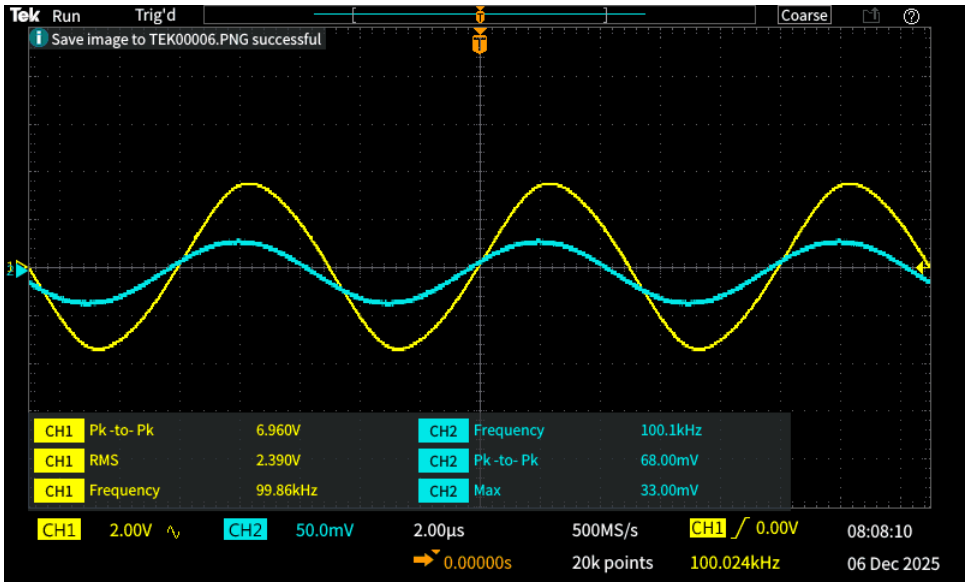

Figure 2: Screenshot of an input signal (blue) being amplified by 100 and displayed as an output signal (yellow).

Figure 3 shows the output noise signal seen when the inputs A and B are connected to each other. The RMS voltage, which is $596.7\mu V$, is the noise at output, δV_{noise}^{out}. Then, using equation (1) from the introduction and theory section, we see that

$$\delta V_{noise}^{in} = \frac{\delta V_{noise}^{out}}{100} = 5.967\mu V$$

Now, notice that the output signal shown on the screenshot is sensitive to frequencies between $1/(10.0\mu s) = 100kHz$ and $2MHz$, because of the low-pass filter bandwidth that we added. This means our bandwidth is about $2MHz - 100kHz = 1.9MHz$. It follows that our short-circuit input noise is

$$\boxed{\frac{\delta V_{noise}^{in}}{\sqrt{1.9MHz}} \approx 4.33nV/\sqrt{Hz}}$$

Figure 4 is a short circuit input noise voltage vs frequency graph shown in the Stanford Research Systems SR560 model specification sheet. This graph shows that for frequencies greater than 100 Hz, the short circuit input noise voltage approaches a value of about 3-4 $nV/\sqrt{Hz}$. This closely aligns with our measurement of the short-circuit input noise voltage for our version of the SR560 circuit.

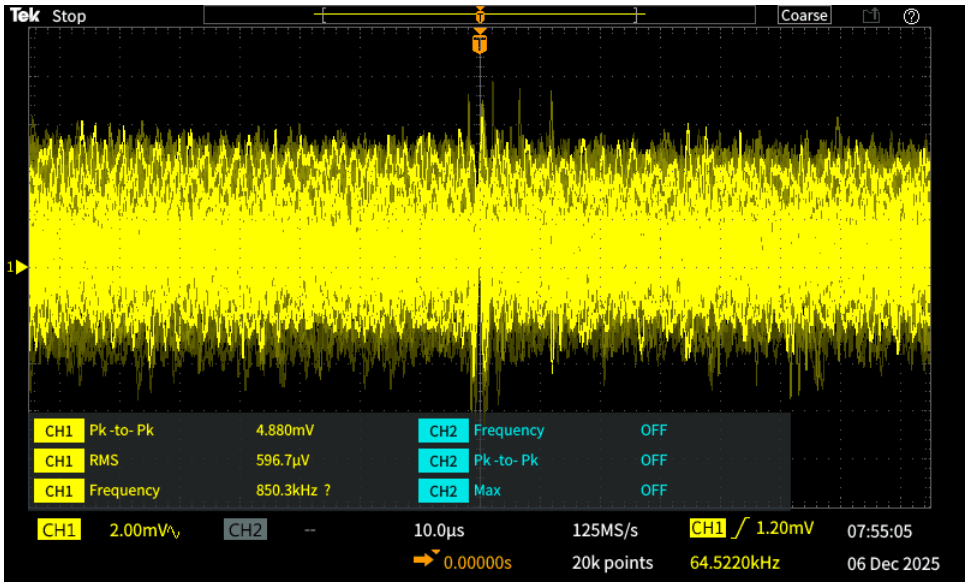

Figure 3: Screenshot of the output noise when shorting both inputs of the circuit.

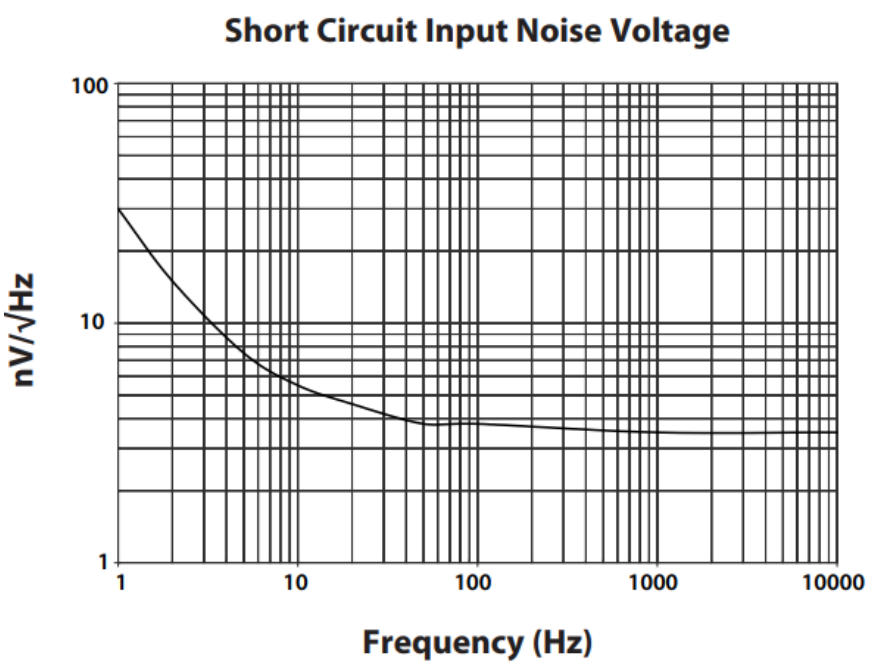

Figure 4: A Short Circuit Input Noise Voltage vs Frequency plot shown in the specification sheet of the Stanford Research Systems SR560 model.

3 Conclusion

We successfully constructed and tested a low-noise amplifier modeled after the SR560. Our measurements show that the circuit achieved a gain of approximately 100, which implies both amplifying stages worked properly. Then, with the inputs shorted, we measured an input noise of $4.33nV/\sqrt{Hz}$, which closely matched the 3-$4nV/\sqrt{Hz}$ per-

formance indicated in the SR560 specification sheet.

Although the breadboard implementation introduced challenges such as unwanted oscillations and increased noise, we were able to mitigate them through op-amp substitutions and proper calibration and noise reduction.

References

[1] Stanford Research Systems, *SR560 Low-Noise Preamplifier Specification Sheet*, SR560c. Available: `https://www.thinksrs.com/downloads/pdfs/catalog/SR560c.pdf`