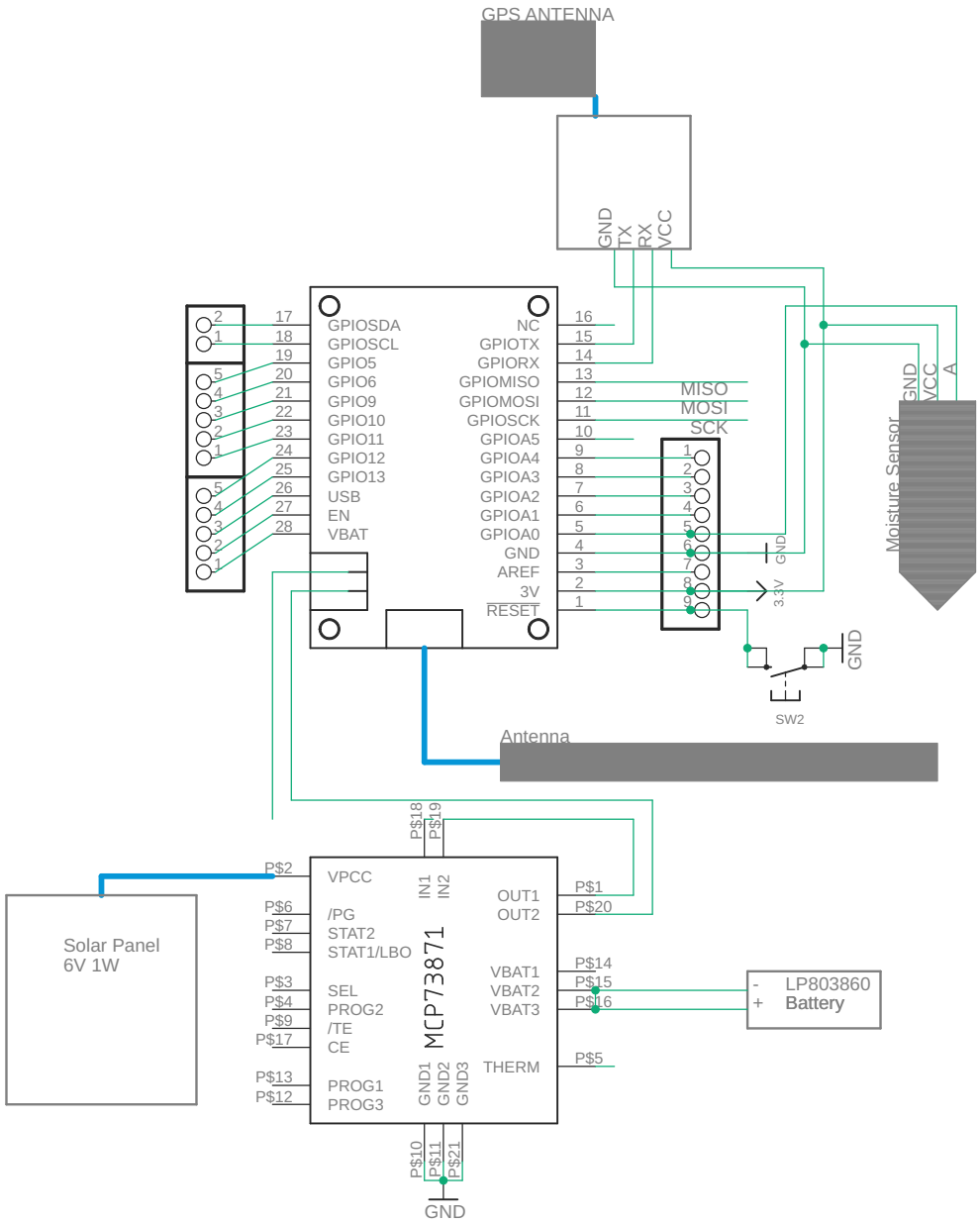

Mesh Wiring Diagram

Team 3

Sheet: 1

Date: 3/23/19 4:09 PM	
TITLE: mesh	Sheet: 2/2