RV College of Engineering®
Mysore Road, RV Vidyaniketan Post,
Bengaluru - 560059, Karnataka, India

Go, change the world®

Summer Internship Report
on

"AERO-STRUCTURAL DESIGN OF eVTOL"

Summer Internship
(AS376SI)

Submitted by

SONIKA JAIN CS

USN: 1RV22AS054

Carried Out at,

The ePlane Company

IIT-M research park, Chennai

Submitted in
partial fulfillment for the award of degree
of

BACHELOR OF ENGINEERING

in

Aerospace Engineering,

DEPARTMENT OF AEROSPACE ENGINEERING

2025 - 26

RV COLLEGE OF ENGINEERING®

(Autonomous Institution Affiliated to Visvesvaraya Technological University, Belagavi)

DEPARTMENT OF AEROSPACE ENGINEERING

Bengaluru– 560059

CERTIFICATE

Certified that the Internship work titled **"Aero-Structural Design of eVTOL"** carried out by SONIKA JAIN CS, USN: 1RV22AS054, a bonafide student, submitted in partial fulfilment for the award of Bachelor of Engineering in **Aerospace Engineering** of RV College of Engineering®, Bengaluru, affiliated to Visvesvaraya Technological University, Belagavi, during the year **2025-26**. It is certified that all corrections/suggestions indicated for internal assessment have been incorporated in the report deposited in the departmental library. The Internship report has been approved as it satisfies the academic requirement in respect of internship work prescribed for the said degree.

Evaluation Committee Member/s
(Name, Signature)

1.

2.

Dr. Supreeth R.
Associate Professor and Head
Department of Aerospace
RV Collège of Engineering

Name of the External Examiners	**Signature with Date**
1._____	_____
2._____	_____

CERTIFICATION

THE ePLANE CO.

Ubifly Technologies Pvt. Ltd
IITM Research Park, No. 1FA, 1 Floor, Kanagam
Taramani, Chennai, Tamil Nadu, India

Date: 10.10.2025

Internship Completion Confirmation Letter

Dear **Sonika Jain C S,**

This is to confirm that you have successfully completed your internship at **Ubifly Technologies Pvt Ltd (The ePlane Company)**. This internship was carried out from **20.08.2025** to **10.10.2025** in the **Tec – Structural Design** Department.

During this period, your primary guide **M. Anantharaman Janardhanan,** supervised you and guided your work. The internship was unpaid, and its primary objective was to provide you with valuable practical experience that aligns with your academic background and career goals.

We believe that your contribution was meaningful to our team, and we believe you gained valuable industrial exposure to relevant engineering and organisational practices.

If you have any questions or require further information, please do not hesitate to contact us.

Reporting Location: - The ePlane Company (Thaiyur Campus), Pudupakkam, Tamil Nadu 603103.

S Snow White Anandhi | AVP & Head - People Excellence & Satisfaction
Ubifly Technologies Pvt Ltd (The ePlane Company)

+91 9884378891 www.eplane.ai contact@eplane.a
ubifly

ACKNOWLEDGEMENT

I extend my sincere gratitude to **Mr. Anantharaman Janardhanan, Structural Design Lead, ePlane Company**, for his unwavering guidance throughout the internship. His technical expertise, constructive feedback, and consistent support played a crucial role in shaping my work and ensuring its successful completion.

I express my heartfelt thanks to **Mr. Adhith M, Senior Engineer and Deputy Team Lead – Structural Design**, for his dedicated mentoring and continuous technical assistance. His hands-on guidance, approachability, and encouragement were instrumental in enhancing my practical understanding and problem-solving abilities during the course of the project.

I also acknowledge the valuable support and cooperation extended by the Structural Design Team at ePlane, whose collaborative efforts and professional insights significantly contributed to my learning experience and the smooth execution of assigned tasks.

I express my sincere thanks to **Dr. Supreeth R, Head, Department of Aerospace Engineering, R.V. College of Engineering**, for his valuable guidance, encouragement, and for fostering an academic environment conducive to research, innovation, and practical learning.

I am grateful to **R.V. College of Engineering** for providing the academic platform and necessary facilities, and to **ePlane Company** for offering the opportunity, technical exposure, and professional environment that made this internship a valuable and enriching experience.

Sonika Jain CS

1RV22AS054

Executive Summary

This report documents the internship/project work carried out at **ePlane Company, Chennai**, focusing on structural design and composite manufacturing activities associated with the development of electric Vertical Take-Off and Landing (eVTOL) aircraft. The work provided exposure to both organizational practices and hands-on engineering tasks within an industrial aerospace environment.

The study begins with an understanding of ePlane's organizational structure, products, services, business operations, manpower, and professional practices, highlighting the company's role in advancing sustainable electric aviation and urban air mobility solutions. Exposure to departmental workflows and interdisciplinary coordination offered insight into how engineering teams function collectively in a real-world aerospace organization.

The primary focus of the work was on technical tasks related to aircraft structural design and composites. Significant activities included airfoil selection and analysis using theoretical calculations and XFLR software, followed by wing surface modelling using CATIA. Composite Part Design (CPD) techniques were applied to develop structural components, visualize ply groups, and ensure design feasibility. Practical exposure to composite manufacturing processes was gained through hands-on involvement in surface preparation, tooling and mould setup, ply layup, vacuum bagging, curing, and quality control procedures. Cleanroom practices, material handling, and tethering methods for eVTOL testing further enhanced understanding of industry-standard manufacturing and testing protocols.

The internship also contributed to the development of technical proficiency in aerospace design tools, composite materials, and structural concepts, while simultaneously strengthening soft skills such as teamwork, communication, time management, problem-solving, and professional discipline. Interaction with engineers from multiple subsystems improved collaborative abilities and awareness of industrial engineering practices.

Overall, the experience successfully bridged theoretical knowledge with practical application, providing valuable insight into electric aircraft structural design and composite manufacturing processes, and contributing meaningfully to professional and technical growth.

Table of Contents

Certificate i

Certificate from Industry/Organization ii

Acknowledgement iii

Executive Summary iv

Table of Contents v

1 Chapter 1

Profile of the Organization 1
1.1 Organizational Structure 2
1.2 Products 3
1.3 Services 4
1.4 Business Partners 4
1.5 Financials 5
1.6 Manpower 5
1.7 Societal Concerns 5
1.8 Professional Practices 6

2 Chapter 2

Activities of the Department 7
2.1 Overview of the Structural Design Team 8
2.2 Role in Early Prototype Development 8
2.3 Contribution to the e50 One-Third Scale Prototype 8
2.4 Structural Responsibilities in the e200X Program 8
2.5 Interaction with Aerodynamics 9
2.6 Coordination with Manufacturing and Other Subsystems 9
2.7 Overall Significance of the Structural Design Team 9

3 Chapter 3

Tasks Performed **10**
3.1 Airfoil Selection 11
3.1.1 Introduction to Airfoil Design vs. Selection 11
3.1.2 Calculation of Clark Y Airfoil 13
3.1.3 Tabulation of Airfoil Characteristics 14
3.1.4 XFLR Design Demonstration 14
3.2 Surface Modelling of Wing 15
3.2.1 Structural Components 15
3.2.2 Design Methodology and Software Tools 15
3.2.3 Demonstration in CATIA(surface Modelling0 18
3.2.4 Composite Part Design 20
3.2.5 CPD Implementation and Ply Group Visualization 23
3.3 Composite Layup 24
3.3.1 Surface Preparation and Contamination Removal 24
3.3.2 Tooling and Mold Preparation 24
3.3.3 Layup Procedure 25
3.3.4 Vacuum Bagging and Consolidation 26
3.3.5 Curing Process 27
3.3.6 Validation and Quality Control 27
3.3.7 Cleanroom Environment and Material Storage 29
3.3.8 Tethering for eVTOL Testing 32

4 Chapter 4

Reflections **39**
4.1 Technical Knowledge Acquired 40
4.1.1 Soft Skills Acquired 42

5 Chapter 5

References **45**

List of Figures

1.1 Organizational Structure of the Organization 2
1.2 e200X: ePlane's Flagship All-Electric Air Taxi 3
1.3 Technological Partners: Ramco Systems and TCS 4

3.1 XFLR Airfoil Design Demonstration 14
3.2 Wing Cross-Section 18
3.3 Wing Skin 18
3.4 Ribs at Station 12 19
3.5 Leading Edge Rib at Station 12 19
3.6 Front Spar 19
3.7 CATIA Composite Part Design of Wing Structure 23
3.8 Cross-Section View of Ply Groups (Bottom, Core, and Top) 23
3.9 Carbon Fiber Material Storage Facility 31
3.10 ISO Class 7 Cleanroom Before Entering Layup Zone 31
3.11 Four-Point Tethering System for eVTOL Testing 32

List of Tables

3.1 Airfoil specifications and geometric parameters 14
3.2 Performance characteristics of airfoils 14
3.3 Composite Layup Sequence 21

Chapter 1

Profile of the Organization

1.Profile of the Organization

1.1 Organizational Structure

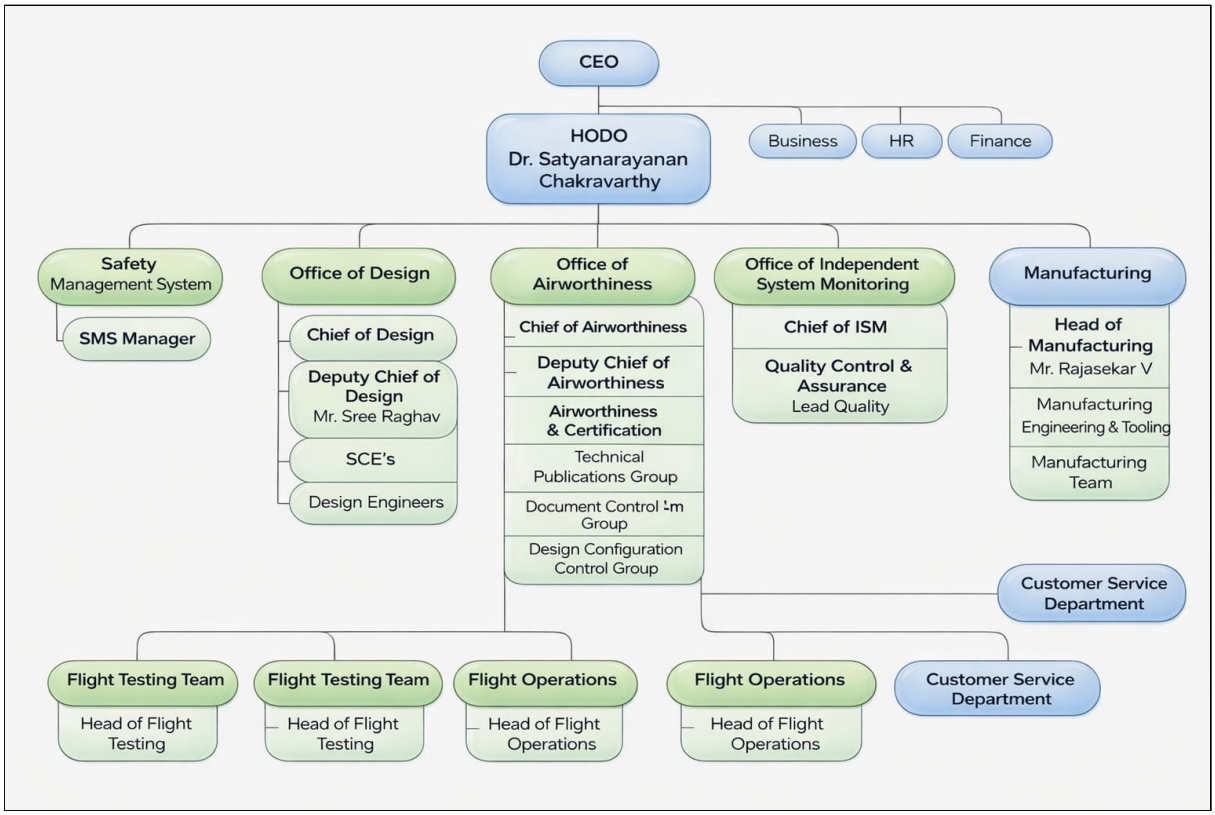

Figure 1.1: Organizational Structure of the Organization

As shown in Figure 1.1, the organizational hierarchy is structured to support aerospace design, certification, manufacturing, and operational activities in compliance with aviation regulatory requirements. The organization is led by the Chief Executive Officer (CEO), with the Head of Design Organization (HODO), Dr. Satyanarayanan Chakravarthy, reporting directly below, alongside parallel business, human resources, and finance functions. Under the HODO, core technical and compliance-oriented divisions are clearly segregated, including the Safety Management System, Office of Design, Office of Airworthiness, Office of Independent System Monitoring (ISM), and Manufacturing, ensuring regulatory independence and accountability. The Office of Design comprises leadership roles and design engineers responsible for product development, while the Office of Airworthiness oversees certification, documentation, configuration control, and technical publications. The Office of Independent System Monitoring manages quality control and assurance activities, maintaining oversight separation from both design and manufacturing. Manufacturing is supported by engineering, tooling, and production teams, and downstream operational functions include flight testing, flight operations, and

customer service departments, illustrating a comprehensive, certification-ready organizational structure aligned with aviation regulatory best practices.

1.2 Products

Figure 1.2: e200X: ePlane's Flagship All-Electric Air Taxi

The ePlane Company, incubated at IIT Madras, focuses on the development of compact, all-electric, zero-emission air mobility solutions tailored for urban environments. Its core mission is to provide efficient, quiet, and sustainable transportation for mid-mile urban air mobility, addressing congestion and pollution challenges in cities. The company's aircraft integrate advanced electric propulsion systems, lightweight structural materials, and optimized aerodynamic designs to ensure safety, reliability, and energy efficiency. Designed primarily as an air taxi, ePlane's solutions offer scalable deployment potential in the rapidly expanding global urban air mobility market.

ePlane has developed a series of prototypes to validate and refine its eVTOL technology. The **ATVA**, was the company's first hybrid eVTOL platform. It successfully demonstrated the core design principles of the aircraft, validating the transition and lift concepts through early flight tests. Following this, the **e50** a larger one-third scale prototype, completed its initial flight test phase, proving critical transition maneuvers and aerodynamic performance at scale. Finally, the **e200X** (Figure 1.2) represents ePlane's flagship all-electric air taxi, currently progressing through DGCA type certification since December 2024 and designed for commercial urban air mobility, marking a key milestone toward operational deployment.

1.3 Services

The organization offers a comprehensive suite of services that support the entire lifecycle of aerospace products, from conceptual design to operational deployment. These services include design and engineering support, certification consulting, manufacturing assistance, and post-production operational services. The Design Organization provides technical expertise for aircraft and system development, including aerodynamic analysis, structural design, propulsion integration, and avionics systems. Certification services ensure compliance with aviation regulatory standards, guiding clients through airworthiness approvals, documentation, and safety assessments. Manufacturing support encompasses tooling, production planning, quality control, and supply chain management. Additionally, the organization provides operational services such as flight testing, pilot training, maintenance support, and customer service, ensuring that aircraft are safely and efficiently deployed in real-world scenarios. Together, these services demonstrate a holistic approach, combining technical excellence with regulatory compliance and operational readiness.

1.4 Business Partners

Figure 1.3: Technological Partners: Ramco Systems and TCS

The organization collaborates with a network of strategic business partners to strengthen capabilities across technology development, operations, and deployment of its eVTOL aircraft. Key partners include **Ramco Systems**, which provides aviation software for lifecycle management of the e200X fleet; **Tata Consultancy Services (TCS)**, developing AI, data analytics, and IoT solutions for operational optimization; and **Sona Comstar**, responsible for motors, gearboxes, and inverters for the aircraft. **Empire Aviation** partners for air taxi deployment and fleet management across the UAE, Southeast Asia, and India, while the **International Critical Care Air Transfer Team (ICATT)** has secured major deals to use e200X aircraft as air ambulances. Additionally, **ETAC (Emerging Technologies Aviation Consulting)** collaborates on vertiport development and pilot training. Figure 1.3 illustrates the logos of Ramco Systems and TCS, highlighting two of the key technological partners supporting ePlane's operations.

1.5 Financials

The organization has attracted significant investor interest since its inception in 2019, reflecting confidence in its urban air mobility vision and technological progress. Early funding included approximately **$5 million** raised in seed and pre-Series. A rounds, led by venture funds such as Speciale Invest, Micelio Mobility, and angel investors, which supported initial prototype development and certification groundwork.

In November 2024, the company closed a major **$14 million Series B funding round**, co-led by Speciale Invest and Singapore's Antares Ventures, with participation from Micelio Mobility, Naval Ravikant, Java Capital, Samarthya Investment Advisors, Redstart, and Anicut. This round valued the company at approximately **$46 million** post-money and will accelerate global regulatory certification, flight testing, and commercialisation efforts.

Cumulatively, ePlane has raised over **$20 million** in external funding to date, positioning it as one of India's best-funded eVTOL startups. Operational expenditures — including workforce, R&D, prototype airframe construction, and certification activities — are currently estimated at around **15 crore per annum**, while median development costs for preparing the flagship e200X for type certification are forecast at **60–75 crore** over the next 18 months. Projected revenue streams upon commercial deployment include aircraft sales, air taxi operations, and maintenance services, initially targeted at **50–80 crore per year** by 2028 as the fleet scales. The financial strategy emphasises sustainable growth, regulatory compliance, and transparent reporting to maintain investor confidence and long-term viability in the urban air mobility market.

1.6 Manpower

The organization maintains a highly skilled and multidisciplinary workforce to support its aerospace operations, ranging from conceptual design to manufacturing and flight operations. This includes aeronautical engineers, design specialists, avionics experts, certification professionals, manufacturing engineers, quality assurance personnel, and operational staff such as pilots and maintenance crews. Continuous training, professional development, and safety-oriented skill enhancement programs ensure that the workforce remains competent in the latest technologies and regulatory standards. The manpower structure is designed to maintain clear lines of responsibility, operational efficiency, and regulatory compliance while fostering innovation and collaboration across technical and operational domains.

1.7 Societal Concerns

The organization is committed to addressing societal responsibilities and environmental sustainability in its operations. By developing all-electric, zero-emission eVTOL aircraft, it directly contributes to reducing urban air pollution and noise levels associated with conventional transportation. Safety and community impact are central considerations in aircraft design, operational procedures, and flight testing. Additionally, partnerships such as with ICATT high-

light the company's contribution to emergency medical services and humanitarian applications, demonstrating a focus on public welfare. Social responsibility initiatives extend to workforce development, educational outreach, and collaboration with local communities, ensuring that technological progress aligns with broader societal benefits.

1.8 Professional Practices

The organization strictly adheres to established professional and ethical practices across all domains of its operations. This includes compliance with national and international aviation regulations, rigorous safety protocols, and systematic documentation and reporting. Professional practices are reinforced through structured quality assurance, independent system monitoring, and transparent communication channels both internally and with regulatory authorities. Collaborative decision-making, accountability, and continuous process improvement are emphasized, fostering a culture of integrity, excellence, and innovation. By integrating these principles into design, manufacturing, and operational workflows, the organization ensures not only regulatory compliance but also sustained trust and credibility within the aerospace community.

Chapter 2

Activities of the Department

2.Activities of the Department

2.1 Overview of the Structural Design Team

The Structural Design Team is a core technical department within the organization, responsible for ensuring the structural integrity, safety, and manufacturability of the eVTOL aircraft across all stages of development. The team translates aerodynamic configurations, operational requirements, and regulatory constraints into structurally sound designs that meet strength, stiffness, weight, and durability targets. Its activities span conceptual design, preliminary sizing, detailed structural design, analysis, and support during manufacturing and testing phases.

2.2 Role in Early Prototype Development

During the development of the ATVA hybrid eVTOL prototype, the Structural Design Team focused on validating fundamental design assumptions and load paths. The team was responsible for material selection, primary structural layout, and basic strength assessments to support early flight testing. Emphasis was placed on rapid prototyping, structural feasibility, and accommodating frequent design iterations, which enabled efficient validation of lift, transition, and propulsion integration concepts.

These early experiences provided valuable insights into structural behavior under combined aerodynamic and propulsion-induced loads, forming the foundation for improved design methodologies in subsequent projects.

2.3 Contribution to the e50 One-Third Scale Prototype

For the e50 one-third scale prototype, the Structural Design Team played a more advanced role in refining airframe architecture and load distribution. Structural layouts were optimized to manage transition maneuvers, rotor-induced loads, and dynamic effects encountered during flight testing. The team conducted detailed analyses to improve stiffness characteristics while minimizing structural weight, ensuring flight stability and performance at scale.

The e50 program also allowed the team to evaluate manufacturing techniques and assembly processes, strengthening the feedback loop between design and production considerations.

2.4 Structural Responsibilities in the e200X Program

In the flagship e200X aircraft program, the responsibilities of the Structural Design Team expanded significantly in scope and complexity. The team is actively involved in detailed finite element modelling, static and dynamic load analysis, fatigue and damage tolerance assessments, and crashworthiness evaluations. Structural designs are developed in compliance with

DGCA airworthiness and certification requirements, with a strong emphasis on documentation, traceability, and configuration control.
Lightweight composite structures, modular assemblies, and scalability for serial production are key focus areas, ensuring that the airframe meets both performance and commercial viability objectives.

2.5 Interaction with Aerodynamics

A close and continuous interaction exists between the Structural Design Team and the Aerodynamics department. Aerodynamic parameters such as lift distribution, control surface sizing, rotor placement, and external geometry directly influence structural loads and internal architecture. Iterative coordination between the two teams ensures that aerodynamic efficiency is achieved without compromising structural integrity, stiffness, or weight targets.
Design changes arising from aerodynamic optimization are jointly assessed for their structural impact, maintaining a balanced and integrated aircraft design approach.

2.6 Coordination with Manufacturing and Other Subsystems

The Structural Design Team works closely with the Manufacturing and Tooling teams to ensure that designs are practical, repeatable, and cost-effective to produce. Design for Manufacturability (DFM) and Design for Assembly (DFA) principles are incorporated from early stages to minimize production complexity and ensure quality consistency during scale-up.
In addition, the team interfaces extensively with other subsystems, including propulsion, avionics, landing gear, and safety systems. Structural provisions are made for mounting electric motors, batteries, and avionics equipment while addressing vibration, thermal, and maintenance considerations. This multidisciplinary coordination ensures seamless subsystem integration and long-term structural reliability.

2.7 Overall Significance of the Structural Design Team

The Structural Design Team acts as a central integrator within the organization, linking aerodynamic performance, system integration, manufacturing feasibility, and regulatory compliance. Its contributions across ATVA, e50, and e200X programs have been critical in advancing the organization from experimental prototypes to a certification-ready commercial eVTOL platform. Through systematic design practices and cross-functional collaboration, the team supports the organization's goal of delivering safe, efficient, and scalable urban air mobility solutions.

Chapter 3

Tasks Performed

3. Summary of Tasks Performed During the Internship

3.1 Airfoil Selection

3.1.1 Introduction to Airfoil Design vs. Selection

The primary function of the wing is to generate lift through its airfoil cross-section, a two-dimensional shape that also produces drag and pitching moment. Wings can have constant or varying cross-sections along the span.
There are two approaches to determining the wing airfoil:

1. Airfoil design: A complex, expertise-intensive process requiring graduate-level aerodynamics knowledge and wind-tunnel validation. Feasible for large companies like Boeing or Airbus but costly for smaller firms.

2. Airfoil selection: Choosing from existing databases, ideal for experimental aircraft, home-builds, or resource-limited designers.

Modern CFD software has simplified design, applicable beyond aircraft to turbine blades, propellers, pumps, and fans. For those without resources, selection from databases like NACA or Eppler is recommended.

Explanation: Airfoil design optimizes for specific needs but demands significant time and cost. Selection leverages proven airfoils, balancing performance with practicality—key for student or small-team projects like eVTOL or lander designs.

Aerodynamic Analysis and Computational Tools

Traditional theories (potential-flow with boundary-layer corrections) have evolved with computing power, now costing far less than wind-tunnel tests. Codes enable tailored analysis for varying Reynolds/Mach numbers.
A notable tool is the Eppler airfoil design code:

- Based on conformal mapping for prescribed velocity distributions.

- Includes panel methods, integral boundary-layer analysis, and aircraft-oriented options (e.g., drag polar computation).

- Runs on personal computers (FORTRAN 77); efficient for $Re = 3 \times 10^4$ to 5×10^7.

- Available from Mark D. Maughmer (North America).

For non-designers, use NACA (Abbott & Von Doenhoff [3]) or Eppler airfoils, with coordinates, C_l, C_d, C_m data.

Explanation: These tools democratize airfoil work—Eppler suits low-Re applications (e.g., eVTOL props), while NACA covers broader uses. They reduce empirical testing, aligning with modern workflows.

Cruising Flight Requirements

Airfoils optimize for cruise, where $L = W$ and $D = T$:
For jets: $C_L = \frac{W}{qS}$
For props: $C_L = \frac{W}{qS(nP)^{0.75}}$, where $n \approx 0.75$ initially.

Explanation: Cruise dominates flight time, so prioritize high C_l at low C_d. These equations guide selection, ensuring lift matches weight under partial throttle—critical for efficient eVTOL cruise phases.

Airfoil Selection Criteria

No single airfoil excels in all areas; use weighted compromise based on requirements (subsonic vs. supersonic, structural, cost, etc.).
Key criteria:

1. Highest maximum lift coefficient ($C_{l_{\max}}$).
2. Proper design lift coefficient (C_{l_d} or C_{l_i}).
3. Lowest minimum drag coefficient ($C_{d_{\min}}$).
4. Highest lift-to-drag ratio ($(C_l/C_d)_{\max}$).
5. Highest lift curve slope ($C_{l_{\alpha_{\max}}}$).
6. Lowest pitching moment coefficient ($C_m \approx 0$).
7. Gentle stall behavior.
8. Structurally feasible (spars, fuel space).
9. Manufacturable cross-section.
10. Cost-effective.
11. Integrates with multi-airfoil wings (Section 5.8).

Typical thickness-to-chord ratios ($(t/c)_{\max}$):

- Low-speed/high-lift (cargo): 15–18%.

- High subsonic/low-lift: 9–12%.
- Supersonic: 3–9%.

Explanation: Rank airfoils by mission priorities (e.g., high $C_{l_{\max}}$ for STOL eVTOL). Weighting avoids trade-offs like high lift but poor L/D. Thickness guides structural design—thicker for low-speed strength.

3.1.2 Calculation of Clark Y Airfoil

Lift Coefficient Calculation

The lift coefficient is calculated using the lift curve slope and angle of attack:

$$C_L = C_{L\alpha}(\alpha - \alpha_0) \tag{3.1}$$

where $\alpha_0 = -3.7$

$$C_L = 4.567(0.0646) = 0.295 \tag{3.2}$$

Drag Coefficient Calculation

The drag coefficient is calculated using the drag polar equation:

$$C_D = C_{D0} + \frac{C_L^2}{\pi e AR} \tag{3.3}$$

Substituting the values:

$$C_D = 0.02 + \frac{(0.295)^2}{\pi(0.8)(6.667)} \tag{3.4}$$

$$C_D = 0.02 + 0.005 = 0.025 \tag{3.5}$$

Lift Force Calculation

The lift force is calculated using:

$$L = \frac{1}{2}\rho V^2 S C_L \tag{3.6}$$

$$L = \frac{1}{2} \times 1.225 \times 55^2 \times 9.6 \times 0.295 \tag{3.7}$$

$$L = 5,247.16N \quad or \quad 535kg \tag{3.8}$$

Lift-to-Drag Ratio

The aerodynamic efficiency is given by:

$$\frac{L}{D} = \frac{C_L}{C_D} = \frac{0.295}{0.025} = 11.753 \tag{3.9}$$

3.1.3 Tabulation of Airfoil Characteristics

Name	Iter.	Chord C (m)	Span (m)	AR	Area (m^2)	Lift curve slope a0 (rad)	Wing Planform factor e	Coeff. of drag Cd
NACA-2412	1	0.1	1	10	0.1	6.28	0.8	0.0212
NACA-2413	2	0.8	8	10	6.4	6.28	0.8	0.0212
NACA-2414	3	1.2	8	6.667	9.6	6.28	0.8	0.0215
Clark-Y	4	1.2	8	6.667	9.6	6.28	0.8	0.0252

Table 3.1: Airfoil specifications and geometric parameters

Lift Coeff. of aerofoil	Zero Lift angle α_0 (rad)	Coeff. of Lift of wing Cl	Velocity V (m/s)	Lift L (N)	Weight W (Kg)	Lift-Drag slope L/D
5.024	-0.0349	0.175	55	32	3.3	8.26
5.024	-0.0349	0.175	55	2079	212.2	8.26
4.567	-0.0349	0.159	55	2835	289.3	7.41
4.567	-0.0646	0.295	55	5248	535.5	11.71

Table 3.2: Performance characteristics of airfoils

3.1.4 XFLR Design Demonstration

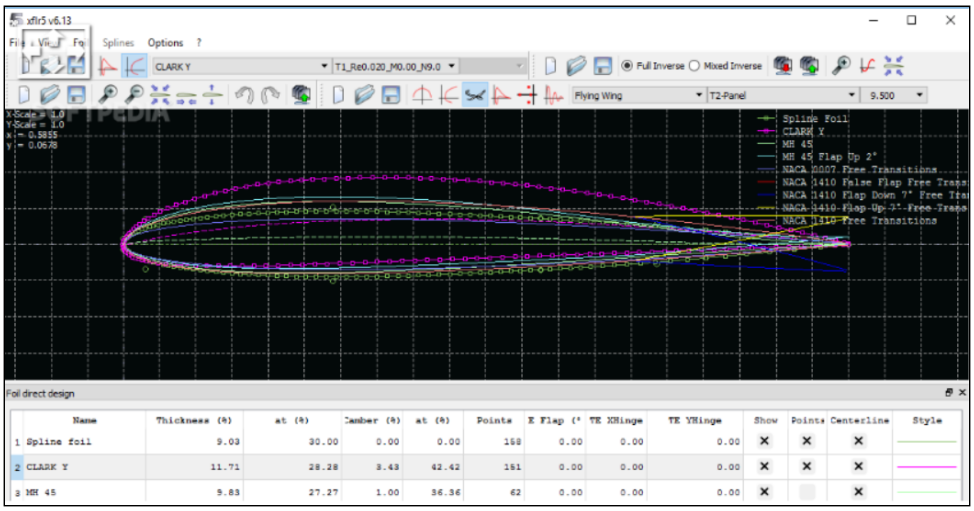

Figure 3.1: XFLR Airfoil Design Demonstration

3.2 Surface Modelling of Wing

3.2.1 Structural Components

Spars (Main Load Carriers)

Spars are the primary structural elements that bear the bending and shear loads experienced by the wing during flight.

- **Number**: Usually 2 (front and rear) for basic wings, but more can be added for heavier loads or larger aircraft, balancing weight vs. strength. For eVTOLs, spars align with prop/lift motor mounts to directly transfer concentrated loads.
- **Location**: Positioned where bending moments are highest, often around 25-30% and 60-70% of the chord (leading edge) for optimal stiffness and load transfer. The goal is to align with the wing's center of rigidity.
- **Design**: Often C-shaped or built-up sections for high bending stiffness and manufacturability. Lightening holes are added in webs to reduce weight.

Ribs (Airfoil Shape & Load Transfer)

Ribs are structural members oriented perpendicular to the spars that maintain the aerodynamic shape of the wing and distribute loads.

- **Function**: Maintain the airfoil profile, transfer skin loads to spars, and support spars against compression/shear.
- **Location**: Spaced along the span to provide sufficient support without excessive weight. Spacing depends on skin thickness, material, and load, often determined through analysis. Station plane is obtained from stress plot.
- **Distribution**: Can be equally spaced or concentrated near high-stress areas, like spar locations, or around controls/motors.

3.2.2 Design Methodology and Software Tools

CATIA 3D Experience

CATIA 3D Experience is a comprehensive computer-aided design (CAD) platform developed by Dassault Systèmes that provides integrated tools for design, analysis, and manufacturing. For wing structural modeling, CATIA offers several key advantages:

- **Parametric Design**: Allows for easy modification of wing geometry, spar positions, and rib spacing through parametric relationships, enabling rapid design iterations.

- **Surface Modeling Capabilities**: Advanced surface modeling tools enable accurate creation of complex airfoil shapes and aerodynamic surfaces with precise control over curvature and continuity.
- **Integrated Analysis**: Built-in finite element analysis (FEA) capabilities allow stress and deflection analysis directly within the design environment, facilitating optimization of structural components.
- **Assembly Management**: Efficient management of complex assemblies with multiple spars, ribs, and skin panels, ensuring proper fit and alignment of all components.
- **Collaborative Platform**: Cloud-based 3D Experience platform enables real-time collaboration among team members, version control, and integrated data management.
- **Manufacturing Integration**: Direct connection to manufacturing processes, including CNC machining and composite layup planning, streamlining the transition from design to production.

Selection of Spar and Rib Configuration

The determination of spar number, location, and rib distribution follows a systematic engineering approach:

Spar Selection Process:

1. **Load Analysis**: Conduct preliminary aerodynamic analysis to determine lift distribution, bending moment, and shear force diagrams along the wing span.
2. **Position Optimization**: Place primary spar near the aerodynamic center (typically 25-30% chord) where maximum bending moment occurs. Rear spar is positioned at 60-70% chord to create a structural box for torsional rigidity.
3. **Number Determination**: Evaluate trade-offs between structural weight and load-carrying capacity. Additional spars may be required for:
    - High aspect ratio wings requiring extra support
    - Attachment points for propulsion systems in eVTOL configurations
    - Control surface actuator mounting locations
    - Local reinforcement for landing gear attachment
4. **Validation**: Perform FEA to verify that selected spar configuration meets strength and stiffness requirements with acceptable safety margins.

Rib Distribution Strategy:

1. **Stress Analysis**: Generate stress contour plots from preliminary FEA to identify high-stress regions requiring additional support.

2. **Buckling Prevention**: Determine maximum allowable unsupported skin panel length based on material properties and compressive loads to prevent skin buckling.

3. **Initial Spacing**: Establish baseline rib spacing (typically 150-300 mm for small aircraft) based on skin thickness and material strength.

4. **Refinement**: Add ribs at critical stations including:

   - Spar intersection points for load transfer
   - Control surface hinge lines
   - Equipment mounting locations
   - Wing-fuselage junction
   - Tip regions where twist and deflection are critical

5. **Weight Optimization**: Use CATIA's optimization tools to minimize rib weight through lightening holes and thickness reduction in low-stress areas while maintaining structural integrity.

6. **Iterative Refinement**: Conduct multiple analysis cycles, adjusting rib spacing and configuration based on stress results, deflection limits, and weight targets until optimal design is achieved.

This integrated approach, utilizing CATIA's powerful modeling and analysis capabilities, ensures an efficient structural design that meets all performance requirements while minimizing weight and manufacturing complexity.

3.2.3 Demonstration in CATIA(surface Modelling0

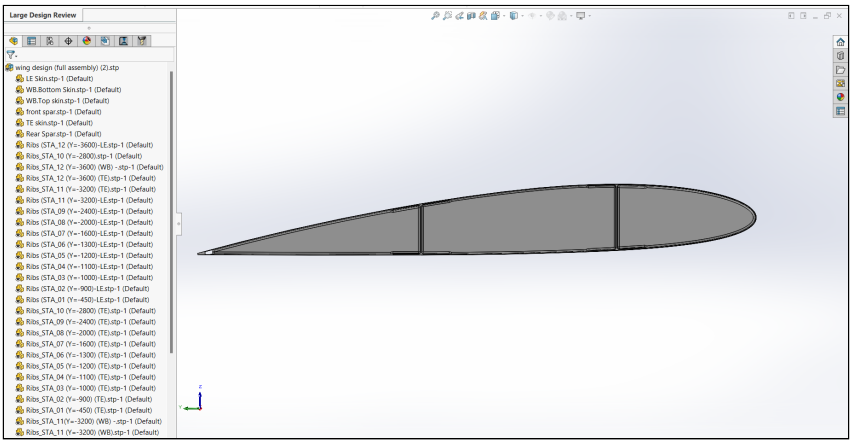

Figure 3.2: Wing Cross-Section

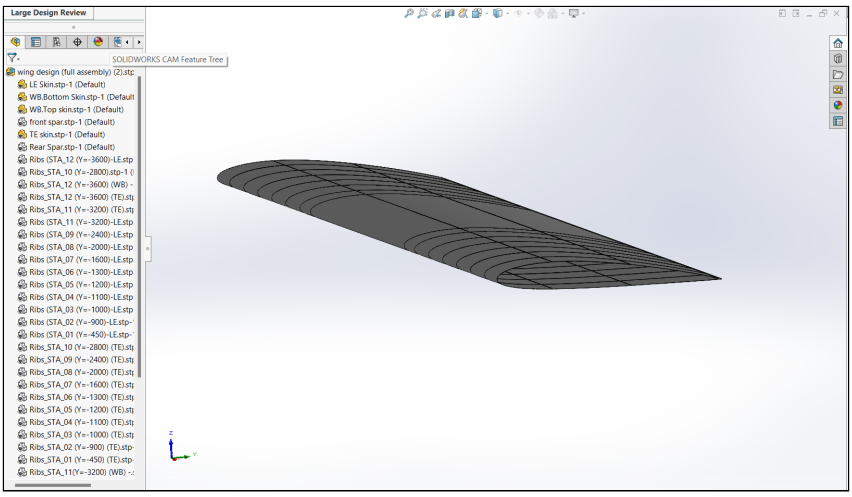

Figure 3.3: Wing Skin

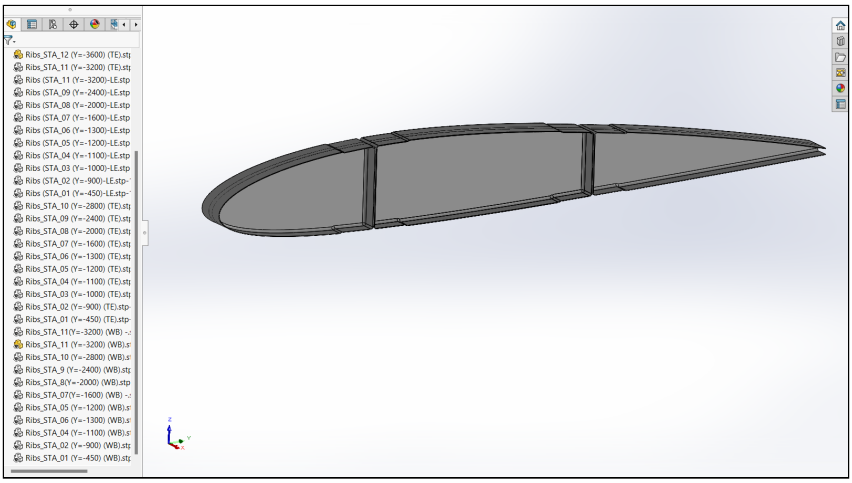

Figure 3.4: Ribs at Station 12

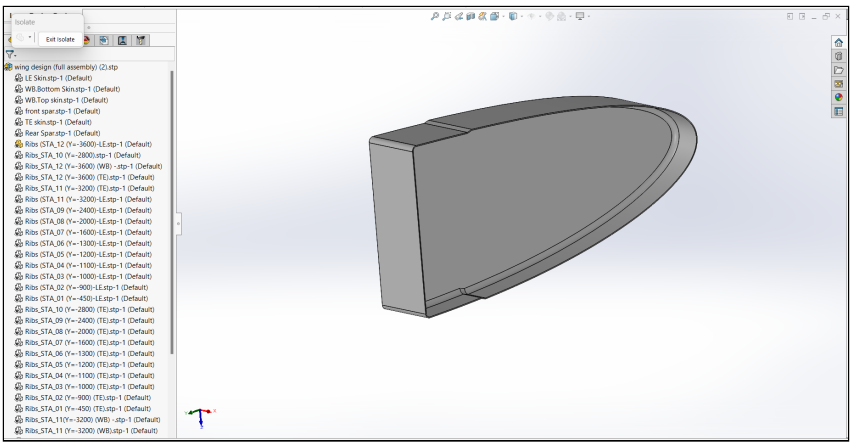

Figure 3.5: Leading Edge Rib at Station 12

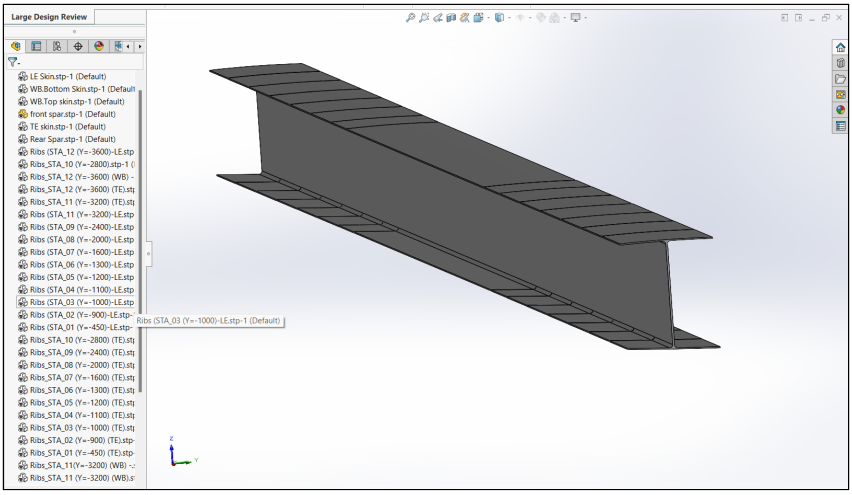

Figure 3.6: Front Spar

3.2.4 Composite Part Design

Ply-by-Ply Layup

The stacking sequence is defined layer-by-layer for each zone, with careful consideration of structural requirements and manufacturing feasibility:

1. **Core Plies**: Start with foundational layers that establish baseline stiffness and define the neutral axis position.
2. **Material Specification**: For each ply, specify:
   - Material grade and supplier
   - Ply thickness (typically 0.125-0.25 mm per ply for prepreg)
   - Fiber orientation angle relative to the local rosette
   - Ply contour and extent within the zone
3. **Stacking Rules**: Apply design guidelines such as:
   - Maximum of 4 consecutive plies in the same orientation
   - Gradual angle changes (no more than 45° between adjacent plies)
   - Surface plies at 0° or ±45° for impact resistance
   - 10% rule: at least 10% of plies in each of the 0°, ±45°, and 90° directions
4. **Ply Drop-Offs**: Define tapered regions where ply count reduces, ensuring:
   - Staggered terminations (minimum 25 mm between adjacent ply ends)
   - Gradual thickness transitions (maximum 5° taper angle)
   - Reinforcement plies at termination regions if required

Ply Sequence Considered During Software Layup

The following table presents the specific ply sequence implemented in CATIA Composites Part Design for the wing structure:
This symmetric layup configuration [±45°/0°/90°/0°/90°/±45°/±45°/0°/90°/0°/90°/±45°] provides:

- **Balanced Design**: Equal number of +45° and -45° plies prevents warping and ensures uniform shear properties.
- **Quasi-Isotropic Behavior**: Combination of 0°, 90°, and ±45° orientations provides relatively uniform in-plane properties in all directions.
- **Impact Resistance**: Outer ±45° plies provide excellent impact resistance and damage tolerance.

Table 3.3: Composite Layup Sequence

Layer	Material	GSM	Orientation	Thickness
1	C	160	±45°	0.2
2	C	160	0/90°	0.2
3	C	160	0/90°	0.2
4	C	100	±45°	0.123
5	C	100	±45°	0.123
6	C	160	0/90°	0.2
7	C	160	0/90°	0.2
8	C	160	±45°	0.2

- **Bending Stiffness**: 0° plies placed away from the neutral axis maximize bending stiffness for spanwise loads.
- **Shear Capability**: Inner ±45° plies efficiently carry shear and torsional loads.
- **Total Thickness**: Approximately 1.446 mm, providing adequate strength while maintaining low weight.

Where:

- **Material C**: Carbon fiber prepreg
- **GSM**: Grams per Square Meter (areal weight of fabric)
- **Orientation**: Fiber direction relative to reference axis
- **Thickness**: Individual ply thickness in millimeters

Ply Group Organization

The composite layup is organized into three distinct ply groups to facilitate manufacturing and quality control:

- **Bottom Ply Group**: Consists of the lower face sheet plies (Layers 1-3) that form the aerodynamic lower surface of the wing. This group provides the foundation for the laminate and is laid up first on the mold surface.
- **Core Ply Group**: Contains the middle plies (Layers 4-5) that work in conjunction with any core material in sandwich construction. These plies provide shear transfer between face sheets and contribute to overall bending stiffness. A bevel angle of 27±3° is considered for the core to ensure proper load transition and avoid stress concentrations at ply terminations.
- **Top Ply Group**: Comprises the upper face sheet plies (Layers 6-8) that form the aerodynamic upper surface. This group completes the sandwich structure and provides the outer protective layer.

Offset Considerations in CPD on NMG

When performing Composites Part Design on the Natural Master Geometry (NMG), four critical offsets are considered to ensure proper fit and assembly:

1. **Skin Thickness**: The NMG surface is offset by the total skin thickness to account for the complete laminate build-up. This ensures that the outer mold line (OML) matches the aerodynamic surface requirements.

2. **Assembly Clearance**: Additional offset is applied to provide clearance for assembly operations, including:

   - Tolerance stack-up from manufacturing variations
   - Sealant or adhesive thickness between components
   - Shimming requirements for fit-up during final assembly
   - Tool access for fastener installation

3. **Top Face Sheet Thickness**: In sandwich construction, the top face sheet thickness is explicitly offset from the core interface to define the proper position of the upper laminate relative to structural datums.

4. **C-Flange Thickness**: The C-flange (the return flange on composite structures that provides bonding or fastening surfaces) requires its own offset to ensure proper overlap with mating components such as spars, ribs, or adjacent skin panels. This offset accounts for:

   - Flange laminate thickness
   - Bond line thickness
   - Fastener head clearance if mechanical attachment is used
   - Surface preparation allowance

These offsets are parametrically defined in CATIA CPD, allowing for rapid design iterations when component thicknesses or assembly requirements change. The offset strategy ensures that all composite parts fit together correctly while maintaining the required aerodynamic contours and structural interfaces.

Advanced Stacking Features

- **Sandwich Construction**: Integrate core materials (foam, honeycomb) between face sheets with proper core-to-skin bond ply specifications.

- **Local Reinforcements**: Add extra plies around:

  – Fastener holes and inserts

  – Control surface attachment points

- Landing gear hard points
- System penetrations and cutouts

- **Splice and Joint Design**: Define overlap joints, scarf joints, or stepped joints where multiple composite panels meet, ensuring adequate load transfer.

3.2.5 CPD Implementation and Ply Group Visualization

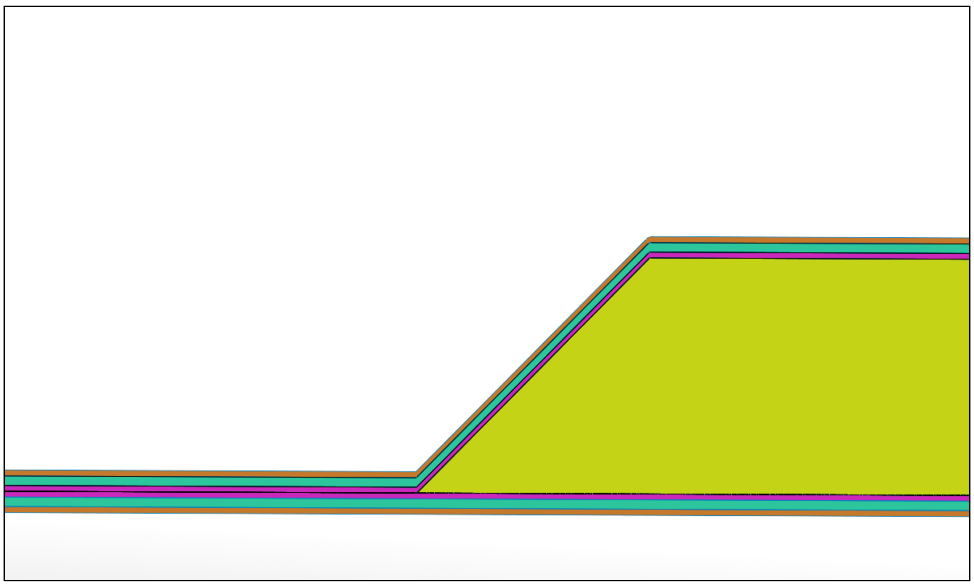

Figure 3.7: CATIA Composite Part Design of Wing Structure

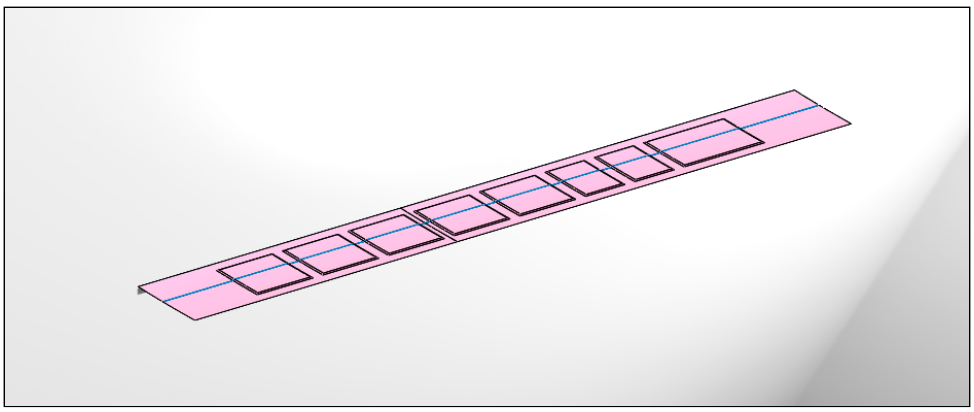

Figure 3.8: Cross-Section View of Ply Groups (Bottom, Core, and Top)

3.3 Composite Layup

The composite layup process for wing repair and fabrication requires meticulous attention to surface preparation, material handling, and environmental controls. This section details the complete procedure from surface preparation through final validation, ensuring structural integrity and regulatory compliance.

3.3.1 Surface Preparation and Contamination Removal

Scuffing and Abrasion

Surface preparation is critical for achieving proper adhesion between repair patches and the parent structure:

- **Mechanical Abrasion**: Abrade the damaged area using 120-220 grit abrasive pads to remove contaminated or degraded resin, exposing clean, undamaged fibers. The abrading process creates a mechanical key for the new resin to bond effectively.
- **Tool Selection**: Avoid machining operations such as grinding or drilling that can introduce microcracks, delamination, or heat-affected zones in the composite material. Instead, use hand tools, pneumatic orbital sanders at low speed, or waterjet cutting for precise material removal without thermal damage.
- **Solvent Cleaning**: After mechanical preparation, clean the surface thoroughly with an approved solvent such as methyl ethyl ketone (MEK) or isopropyl alcohol (IPA) using lint-free wipes. This removes dust, oils, and surface contaminants.
- **Environmental Conditions**: Perform all surface preparation and cleaning operations in controlled conditions with relative humidity below 60% RH to prevent moisture absorption into exposed fibers, which could lead to void formation during cure.

3.3.2 Tooling and Mold Preparation

Resin Block over MDF Base

Creating an accurate repair mold ensures the patch matches the wing's aerodynamic contour:

1. **MDF Base Construction**: Machine a medium-density fiberboard (MDF) substrate to approximate the wing surface geometry in the repair area, leaving slight oversize for final shaping.
2. **Resin Block Application**: Coat the MDF base with SIKA M700 or equivalent moldable resin block compound. This material can be shaped and sanded to create an exact negative contour matching the wing surface profile.

3. **Controlled Curing**: Cure the resin block in an oven using a controlled temperature ramp rate, typically 2°C/min to a target temperature of 80°C, maintaining for the manufacturer-specified dwell time. Slow ramping prevents thermal shock and internal stresses.

4. **Surface Finishing**: After cure, sand and polish the resin block to create a smooth, accurate mold surface. Apply mold release agent to ensure easy demolding after patch fabrication.

5. **Contour Verification**: This tooling ensures the repair patch achieves a flush fit with the surrounding wing curvature, maintaining aerodynamic smoothness and structural load transfer.

3.3.3 Layup Procedure

Sacrificial and Barrier Layers

- **Peel Ply Application**: Apply a fiberglass or nylon peel ply as the first layer on the mold. This sacrificial layer creates a textured surface on the cured laminate that is ideal for secondary bonding.

- **Breather Fabric**: Place breather fabric (polyester felt or similar) over the peel ply to provide an air evacuation path during vacuum bagging, ensuring complete resin consolidation.

- **Release Film**: If required, position a perforated release film between the laminate and peel ply to control resin content and facilitate clean demolding.

- **Purpose**: These barrier layers promote void-free cure by allowing trapped air and volatile compounds to escape during vacuum processing while protecting the vacuum bag from resin breakthrough.

Core Structural Plies

The structural layup follows the engineered stacking sequence:

1. **Resin Wet-Out**: Saturate carbon fiber or fiberglass fabric with the specified resin system (typically epoxy such as Hexcel 8552 or equivalent). Mix resin and hardener according to manufacturer's specifications, monitoring pot life.

2. **Ply Placement**: Layer fabric plies according to the design stack, maintaining specified fiber orientations (0°, ±45°, 90°) relative to the primary load direction. Ensure each ply is properly aligned using reference marks on the mold.

3. **Consolidation**: Roll each ply thoroughly using a ribbed consolidation roller or squeegee to:

    - Remove entrapped air between plies

- Ensure complete resin wet-out of all fibers
- Prevent resin-starved areas (dry spots) that reduce strength
- Achieve target fiber volume fraction (typically 55-65% for aerospace)

4. **Sandwich Core Treatment**: For honeycomb or foam core sandwich repairs:
   - Fill crushed or damaged core cells with syntactic foam filler or potting compound
   - Ensure filler is flush with surrounding core to prevent print-through
   - Allow filler to cure before applying face sheet plies
   - Apply core-to-skin adhesive film or paste to bond face sheets to core

Copper Mesh Integration for Lightning Protection

- **Placement**: Position expanded copper mesh after all structural carbon fiber layers but before the outer sacrificial ply. The mesh provides electrical conductivity pathways for lightning strike protection and electromagnetic shielding.
- **Bonding**: Apply conductive primer or adhesive at the mesh-to-carbon interface to ensure electrical continuity and prevent galvanic corrosion between dissimilar metals.
- **Fastener Selection**: If mechanical attachment is required at metal interfaces, use Hi-Lok or similarly corrosion-resistant fasteners with proper isolation sleeves to prevent galvanic coupling.
- **Grounding**: Ensure the copper mesh makes electrical contact with the aircraft's grounding system to effectively dissipate lightning strike energy.

3.3.4 Vacuum Bagging and Consolidation

Vacuum Bag Assembly

Proper vacuum bagging technique is essential for void-free, high-quality laminates:

1. **Peel Ply Layer**: Apply release-coated peel ply directly over the final structural ply to create a bondable surface texture.
2. **Breather Fabric**: Place adequate breather material to provide vacuum distribution and resin absorption pathways across the entire part.
3. **Vacuum Bag**: Position nylon or polyester vacuum bag film over the assembly, ensuring complete coverage with adequate drape to conform to part geometry.
4. **Tacky Tape Seals**: Seal the bag perimeter using double-sided vacuum bag sealant tape, ensuring no leaks. Apply continuous bead without gaps or wrinkles.

5. **Vacuum Port**: Install vacuum port fitting through the bag, connecting to vacuum pump and pressure gauge.

6. **Vacuum Level**: Draw vacuum to at least 25 inHg (635 mmHg or 85 kPa vacuum), monitoring for leaks. Acceptable leak rate is typically less than 2 inHg drop over 5 minutes.

7. **Humidity Control**: Maintain relative humidity below 60% during vacuum application and cure to prevent moisture entrapment, which causes voids, porosity, and potential delamination.

3.3.5 Curing Process

Oven Cure Cycle

The cure cycle must follow the resin manufacturer's specifications precisely:

- **Temperature Ramp**: Increase oven temperature gradually at the specified ramp rate (typically 2-5°C/min) to the cure temperature, commonly 120-180°C depending on resin system.

- **Dwell Period**: Maintain cure temperature for the specified duration (e.g., 2 hours at 120°C for many aerospace epoxies) to achieve complete crosslinking.

- **Thermocouple Monitoring**: Install thermocouples at multiple locations on the part and in the oven to verify uniform temperature distribution and detect any hot spots or cold areas.

- **Vacuum Maintenance**: Maintain vacuum pressure throughout the cure cycle to ensure continuous consolidation as the resin viscosity drops and flows.

- **Cool-Down**: Allow controlled cool-down at specified rate (typically ¡5°C/min) to room temperature before removing vacuum to minimize residual stresses and prevent thermal shock.

- **Post-Cure**: If required by the resin system, perform additional post-cure heat treatment at elevated temperature (e.g., 150°C for 4 hours) to achieve maximum glass transition temperature (Tg) and mechanical properties.

3.3.6 Validation and Quality Control

Coupon Testing and FEA Correlation

Mechanical testing validates the repair design:

1. **Test Coupon Fabrication**: Manufacture test coupons using identical materials, layup sequence, and cure cycle as the actual repair (e.g., carbon + glass + copper mesh combination).

2. **Finite Element Analysis**: Perform FEA simulation of the repair configuration to predict:
   - Tensile strength and modulus
   - In-plane shear strength
   - Interlaminar shear strength (ILSS)
   - Fatigue life under cyclic loading
3. **Experimental Testing**: Conduct physical tests per ASTM standards:
   - ASTM D3039: Tensile properties
   - ASTM D3518: In-plane shear
   - ASTM D2344: Short-beam shear (ILSS)
   - ASTM D7136/D7137: Impact and compression after impact (CAI)
4. **Performance Criteria**: Compare experimental results to FEA predictions and parent material baseline. Repair must achieve:
   - Minimum 80% recovery of parent material ILSS
   - Tensile strength within 90-110% of design values
   - No premature delamination or fiber breakage modes

Non-Destructive Testing (NDT)

Final inspection ensures internal quality:

- **Ultrasonic Testing**: Use through-transmission or pulse-echo ultrasound to detect:
  - Delaminations between plies
  - Voids or porosity (target ¡2% void content)
  - Incomplete wet-out or resin-rich/resin-starved areas
  - Disbonds at core-to-skin interfaces in sandwich structures
- **Visual Inspection**: Examine exterior surface for:
  - Surface porosity or pinholes
  - Wrinkles or fiber distortion
  - Resin bleed-out or dry areas
  - Proper contour match to surrounding structure
- **Acceptance Criteria**: Parts must meet aerospace standards (e.g., AMS, ASTM) for void content, thickness tolerance, and defect size/distribution.

3.3.7 Cleanroom Environment and Material Storage

ISO Class 7 Cleanroom Requirements

Composite manufacturing for aerospace applications requires controlled contamination levels:

- **Classification**: ISO Class 7 cleanroom (formerly Class 10,000) limits airborne particles 0.5 m to 352,000 particles per cubic meter. This prevents contamination of tacky composite surfaces during layup.
- **Air Filtration**: HEPA-filtered laminar or turbulent airflow continuously removes particulates, maintaining positive pressure relative to surrounding areas.
- **Environmental Controls**:
  - Temperature: 20-25°C (68-77°F) for consistent resin viscosity and worker comfort
  - Relative Humidity: 40-60% RH to prevent moisture absorption and static buildup
  - Air Changes: Minimum 20 air changes per hour for ISO Class 7
- **Personnel Protocols**:
  - Wear lint-free cleanroom garments, hair covers, and gloves
  - Pass through air shower to remove surface particles
  - Minimize skin contact with composite materials
  - Use approved cleaning procedures for tools and surfaces
- **Contamination Control**: Foreign object debris (FOD) such as dust, skin cells, hair, or oils can create weak points in the laminate leading to premature failure. Cleanroom protocols prevent these inclusions.

Carbon Fiber Storage Conditions

Proper material storage preserves fiber and resin properties:

- **Temperature Control**: Store prepreg materials in freezer at -18°C (0°F) or below to arrest resin cure advancement and extend shelf life. Some high-temperature systems may require -40°C storage.
- **Moisture Barriers**: Keep materials in original sealed moisture-barrier bags (typically multiple layers of aluminum-laminated polyethylene) until ready for use. Reseal partially used rolls immediately.
- **Thaw-Out Procedure**:
  - Remove material from freezer 12-24 hours before use
  - Leave in sealed bag during thaw to prevent condensation on cold surfaces

  - Allow to reach room temperature before opening bag
  - Record out-time from the moment bag is opened

- **Dry Fabric Storage**: Store dry carbon fiber fabric (for resin infusion or wet layup) in low-humidity environment (¡60% RH) at room temperature. Protect from UV exposure and mechanical damage.

- **Inventory Management**: Implement first-in-first-out (FIFO) rotation to use oldest materials first, reducing waste from expired shelf life.

Shelf Life and Material Dating

Composite materials have limited usable life due to resin chemistry:

- **Frozen Shelf Life**: Prepreg materials typically have 6-12 months frozen shelf life from manufacture date, depending on resin system. High-performance aerospace prepregs may have shorter life (3-6 months).

- **Out-Time**: Once removed from freezer storage, prepreg has limited out-time (working life) at room temperature:

  - Typical out-time: 5-30 days cumulative at 21°C
  - Accelerated consumption at higher temperatures
  - Must track and document all out-time exposure
  - Material exceeding out-time limits must be scrapped

- **Resin Systems**: Separate shelf life for mixed resin:

  - Pot life: 30 minutes to 4 hours after mixing hardener
  - Unused mixed resin cannot be re-frozen or saved
  - Mix only quantities needed for current layup operation

- **Material Certification**: Each batch includes manufacturer's certificate of conformance (C of C) documenting:

  - Manufacture date and lot number
  - Expiration date (frozen and out-time limits)
  - Test data confirming material properties meet specification
  - Storage and handling requirements

- **Traceability**: Maintain records of material lot numbers used in each repair or production part for quality traceability and potential recall capability.

- **Testing Expired Material**: Material exceeding shelf life may be tested by the manufacturer or qualified laboratory to verify properties remain within specification, potentially extending usable life with proper documentation and approval.

These stringent storage and environmental controls ensure consistent, high-quality composite structures that meet aerospace performance and safety requirements throughout their service life.

Figure 3.9: Carbon Fiber Material Storage Facility

Figure 3.10: ISO Class 7 Cleanroom Before Entering Layup Zone

3.3.8 Tethering for eVTOL Testing

Tethering is a critical safety and validation methodology employed during the early stages of electric vertical takeoff and landing (eVTOL) aircraft development. This controlled testing approach allows engineers to evaluate aircraft performance, stability, and control systems while mitigating risks associated with free flight.

Figure 3.11: Four-Point Tethering System for eVTOL Testing

Tethering System Configuration

The tethering system implemented for eVTOL testing utilizes a robust multi-point restraint design:

- **Four-Point Tethering**: A four-point tether configuration provides balanced restraint of the aircraft, preventing excessive pitch, roll, and yaw motions while allowing limited vertical movement and attitude changes for control system evaluation.
- **Four Boom Mounts**: Tether cables are attached to dedicated hard points on four booms or structural members of the aircraft. These attachment points are strategically located to:
  - Distribute restraint loads symmetrically across the airframe
  - Align with primary structural load paths to avoid inducing bending moments
  - Maintain clearance from propellers and moving control surfaces
  - Allow visual inspection and quick disconnect capability
- **One Block Mount**: A single block-and-tackle or pulley system is incorporated in the tether arrangement to:

  - Provide mechanical advantage for load adjustment
  - Enable controlled vertical displacement monitoring
  - Distribute tension among multiple tether lines
  - Serve as a central load measurement point

- **Ground Latching via Eye Bolts**: Each tether cable is secured to the ground (or test stand structure) through eye bolts that:
  - Provide rated load capacity exceeding maximum expected forces
  - Are anchored into reinforced concrete foundations or structural steel
  - Include quick-release mechanisms for emergency shutdown scenarios
  - Allow tension adjustment to level the aircraft and set initial conditions

Operational Constraints and Safety Protocols

No Full Throttle Operation A critical constraint during tethered testing is the prohibition of full throttle operation:

- **Structural Load Limits**: Full throttle generates maximum thrust that could:
  - Exceed the design load capacity of tether cables and attachment points
  - Induce dynamic loads from aircraft oscillations that amplify static forces
  - Cause catastrophic failure of tether system leading to uncontrolled aircraft motion
- **Propeller Safety**: At full throttle:
  - Propeller tip speeds approach maximum design limits
  - Any tether failure could result in immediate aircraft departure with personnel nearby
  - Blade strike hazards increase if aircraft makes contact with tether hardware
- **Progressive Testing Philosophy**: Tethered tests follow incremental throttle increases (e.g., 25%, 50%, 75% maximum) to:
  - Validate control system response at each power level
  - Identify anomalies before reaching critical thrust levels
  - Characterize thrust-to-weight ratio and control authority margins
  - Build confidence in aircraft systems before free flight
- **Power System Protection**: Limited throttle reduces:
  - Battery discharge rates, extending test duration
  - Thermal stress on motors and electronic speed controllers (ESCs)
  - Risk of power system component failure during critical testing phase

Four-Point Tethering Method

The specific configuration choices are driven by engineering and safety considerations:

Advantages of Four-Point Design

1. **Stability and Balance**: Four-point attachment provides symmetric restraint that:
   - Prevents aircraft from tilting excessively in any direction
   - Maintains center of gravity within safe bounds during attitude changes
   - Distributes aerodynamic and thrust loads evenly across the structure
2. **Controlled Degrees of Freedom**: The system allows limited motion in specific axes:
   - Vertical translation (heave) to measure lift generation
   - Small pitch and roll angles to test stabilization algorithms
   - Constrained yaw rotation to prevent spin-up or cable tangling
   - Prevents lateral translation (surge/sway) that could damage tethers
3. **Redundancy**: Multiple tether points provide:
   - Fail-safe operation if one tether cable experiences partial damage
   - Load redistribution capability in case of asymmetric thrust conditions
   - Multiple visual reference points for monitoring aircraft attitude
4. **Scalability**: Four-point system accommodates:
   - Various aircraft sizes and configurations (quad, hex, octocopter)
   - Adjustable tether lengths for different test scenarios
   - Quick reconfiguration for different test objectives

Boom and Block Mount Strategy

- **Boom Mounts**: Attaching to structural booms (rather than fuselage) ensures:
  - Load introduction at points designed for landing gear or structural interface
  - Clearance from sensitive avionics and payload compartments
  - Easy visual inspection of attachment hardware during operation
  - Simplified installation and removal between test sessions
- **Block Mount**: The mechanical advantage system enables:
  - Fine adjustment of vertical positioning without re-anchoring
  - Real-time load monitoring via inline load cells
  - Emergency descent capability by controlled cable release
  - Reduced ground crew effort for setup and adjustment

Eye Bolt Ground Anchoring

- **Positive Attachment**: Eye bolts provide secure, non-slip connection that:
  - Prevents tether migration or loosening during vibration
  - Allows rated load capacity certification and documentation
  - Enables standardized installation across multiple test sites
- **Safety Margins**: Ground anchors are designed with:
  - Minimum 5:1 safety factor on ultimate load capacity
  - Corrosion-resistant materials for outdoor testing environments
  - Regular inspection and proof-testing protocols

Test Results and Data Acquisition

Tethered testing yields critical performance and safety data:

Performance Metrics Obtained

1. **Thrust Characterization**:
   - Total thrust vs. throttle input relationship
   - Individual motor/propeller performance mapping
   - Thrust coefficient and efficiency curves
   - Verification of thrust-to-weight ratio (target 1.2 for eVTOL)
2. **Power System Validation**:
   - Battery discharge rates at various power settings
   - Motor temperatures and thermal management effectiveness
   - Electronic speed controller (ESC) response and stability
   - Power consumption vs. thrust produced (specific power)
   - Endurance estimates at hover throttle settings
3. **Control System Response**:
   - Flight controller command tracking accuracy
   - Stabilization algorithm effectiveness (PID tuning validation)
   - Control surface or differential thrust authority
   - Sensor fusion and state estimation accuracy (IMU, GPS, barometer)
   - Latency measurements from pilot input to actuator response

4. **Structural Integrity**:
    - Airframe deflections and vibration modes under thrust
    - Boom and motor mount stress levels (via strain gauges)
    - Fastener and joint security under dynamic loads
    - Propeller clearances and blade tracking
    - Identification of resonant frequencies to avoid in flight

Safety and Failure Mode Analysis

- **Emergency Procedures**: Validation of:
  - Motor-out scenarios and aircraft controllability with asymmetric thrust
  - Emergency shutdown response time and descent behavior
  - Pilot override and manual control takeover capability
  - Communication link loss and failsafe activation
- **Anomaly Detection**: Identification of:
  - Excessive vibrations indicating component imbalance
  - Thermal runaway conditions in batteries or motors
  - Control system instabilities or oscillations
  - Unexpected power consumption patterns
  - Sensor failures or erroneous readings
- **Incremental Risk Reduction**: Each successful tethered test:
  - Increases confidence in aircraft readiness for free flight
  - Provides data to refine flight envelope limits
  - Validates simulation models and design calculations
  - Trains pilots and ground crew on normal and emergency procedures

Operational Envelope Mapping

- **Throttle Response Curves**: Correlation between throttle percentage and:
  - Vertical force generation (measured via tether load cells)
  - Attitude authority (pitch/roll angles achieved)
  - Yaw rate capability
  - Power draw and remaining endurance

- **Stability Margins**: Quantification of:
  - Maximum safe pitch/roll angles before loss of control
  - Gust response and disturbance rejection capability
  - Center of gravity travel limits
  - Weight and balance sensitivity
- **Ground Effect Assessment**: Characterization of:
  - Thrust augmentation near ground surface
  - Optimal hover height for efficiency
  - Transition dynamics from ground effect to free air

Documentation and Certification Support Tethered test data supports regulatory compliance:

- **Airworthiness Evidence**: Demonstrates:
  - Aircraft meets design performance specifications
  - Safety-critical systems function correctly
  - No unexpected hazardous behaviors within test envelope
- **Risk Assessment**: Provides empirical data for:
  - Failure modes and effects analysis (FMEA)
  - Fault tree analysis (FTA)
  - Probabilistic risk assessment
  - Hazard identification and mitigation verification
- **Flight Test Plan Validation**: Confirms readiness for:
  - First hover flight (untethered, ground effect)
  - Out-of-ground-effect hover
  - Forward flight transition
  - Full envelope expansion testing

Transition to Free Flight

Successful tethered testing establishes go/no-go criteria for untethered operations:

- **Minimum Performance Thresholds**:
  - Demonstrated thrust-to-weight ratio ¿1.2 at 75% throttle

  - Stable hover achievable within ±5° attitude error
  - All systems nominal across multiple test runs
  - Battery endurance sufficient for planned flight with 30% reserve
- **Safety Milestones**:
  - Zero structural failures or critical anomalies
  - Emergency procedures successfully demonstrated
  - Pilot proficiency verified on simulator and tethered aircraft
  - Ground crew coordination and safety protocols proven
- **Regulatory Approval**:
  - Test data package submitted to aviation authority
  - Compliance with applicable airworthiness standards demonstrated
  - Flight test authorization obtained
  - Insurance and risk management requirements satisfied

This comprehensive tethered testing program ensures that eVTOL aircraft are thoroughly validated in a controlled, low-risk environment before progressing to free flight operations, significantly enhancing safety and reducing the likelihood of costly or catastrophic failures during development.

Chapter 4

Reflections

4.Reflections

4.1 Technical Knowledge Acquired

Aerodynamic Analysis and Airfoil Selection

The internship provided comprehensive exposure to aerodynamic principles and their practical application in aircraft design. Working with the Clark Y airfoil and NACA series airfoils deepened understanding of how airfoil geometry influences aerodynamic performance characteristics such as lift coefficient, drag coefficient, and lift-to-drag ratio. The use of XFLR5 software for airfoil analysis demonstrated the critical importance of computational tools in modern aerospace engineering, allowing rapid evaluation of multiple design candidates before committing to physical prototypes. Learning to interpret lift curve slopes, zero-lift angles, and drag polar equations provided insight into how theoretical aerodynamics translates into practical design decisions that directly impact aircraft performance and efficiency.
The process of calculating lift forces using the fundamental equation involving air density, velocity, wing area, and lift coefficient reinforced the interconnected nature of aircraft design parameters. Understanding that a seemingly simple change in airfoil selection cascades through the entire design—affecting structural requirements, weight distribution, power demands, and operational capabilities—highlighted the systems engineering perspective essential in aerospace development. The experience of comparing different airfoil options based on their performance metrics, such as the superior lift-to-drag ratio of 11.753 achieved with the Clark Y configuration, demonstrated how quantitative analysis drives design optimization and establishes technical justification for engineering decisions.

Structural Design and Analysis

Engagement with wing structural design revealed the complexity of creating lightweight yet robust aerospace structures. Learning about the roles of spars as primary load-carrying members and ribs as shape-maintaining and load-distributing elements provided fundamental understanding of semi-monocoque construction principles. The strategic placement of spars at 25-30
The experience with CATIA 3D Experience platform transformed theoretical structural knowledge into practical CAD modeling skills. Learning to create parametric models that can be easily modified enabled rapid design iterations and what-if analyses. The integration of design and analysis within a single platform illustrated modern aerospace engineering workflows where geometry creation, finite element analysis, and manufacturing preparation occur in coordinated fashion. Understanding concepts such as rib spacing determination based on skin buckling prevention, stress concentration management around cutouts and fastener locations, and the selection of appropriate safety factors for different loading conditions provided practical design knowledge that extends beyond textbook theory.

Composite Materials and Manufacturing

The internship provided extensive hands-on knowledge of composite materials technology, which is increasingly central to modern aerospace manufacturing. Understanding the layup sequence design process, including the rationale for quasi-isotropic stacking sequences with balanced ±45° plies and the 10

The CATIA Composites Part Design module experience provided insight into the specialized workflows required for composite structure development. Understanding concepts such as draping simulation to predict fabric deformation over complex curved surfaces, ply drop-off strategies to create thickness transitions without stress concentrations, and the generation of flat patterns for manufacturing illustrated the complete design-to-production process. Learning about manufacturing considerations such as fiber shear angle limits, minimum ply termination stagger distances, and the importance of symmetric layups to prevent warpage during cure demonstrated that composite design requires simultaneous consideration of structural performance and manufacturing feasibility.

Exposure to actual composite manufacturing processes including surface preparation, resin wet-out techniques, vacuum bagging procedures, and autoclave curing cycles provided invaluable practical knowledge. Understanding the critical importance of cleanliness, with ISO Class 7 cleanroom requirements to prevent contamination-induced defects, emphasized the precision and quality control necessary in aerospace manufacturing. Learning about material storage requirements, including freezer storage at -18°C for prepreg materials and the tracking of out-time and shelf life, revealed the perishable nature of composite materials and the logistical complexity of composite manufacturing operations. The experience with repair procedures including scuffing, tooling fabrication with resin blocks over MDF substrates, and progressive layup of structural and sacrificial plies provided comprehensive understanding of both initial manufacturing and in-service maintenance of composite structures.

Systems Integration and Testing

The tethering test program provided exceptional learning opportunities regarding aircraft systems validation and flight test methodology. Understanding the four-point tethering configuration with boom mounts, block-and-tackle systems, and eye bolt ground anchoring illustrated the safety-first approach essential in aerospace testing. Learning why full throttle operation is prohibited during tethered testing—to prevent tether system overload, protect personnel, and enable progressive validation—demonstrated the incremental risk reduction philosophy that governs aerospace development programs. Observing how tethered tests generate critical data including thrust characterization, power system validation, control system response measurement, and structural integrity assessment showed how systematic testing builds confidence and reveals design deficiencies before costly or dangerous failures occur.

The integration of copper mesh for lightning protection and electromagnetic shielding introduced important aircraft systems knowledge beyond pure structures and aerodynamics. Understanding galvanic corrosion prevention through proper material selection and the use of conductive primers illustrated how materials compatibility considerations extend beyond me-

chanical properties to include electrochemical interactions. Learning about the validation process through both finite element analysis and physical coupon testing, with acceptance criteria requiring minimum 80

Regulatory and Certification Awareness

Throughout the internship, exposure to aerospace standards and regulatory requirements provided understanding of the certification environment in which aircraft are developed. Learning about non-destructive testing methods such as ultrasonic inspection to detect delaminations, voids, and disbonds, with specific acceptance criteria for void content and defect size, illustrated the rigorous quality standards required for aerospace structures. Understanding documentation requirements including material certificates of conformance, batch traceability, and as-built records revealed the comprehensive record-keeping essential for airworthiness certification and in-service maintenance. This regulatory awareness, while sometimes appearing bureaucratic, is recognized as essential to ensuring the safety and reliability of aircraft that carry human lives.

4.1.1 Soft Skills Acquired

Technical Communication and Documentation

The internship significantly developed technical communication capabilities through the creation of detailed design documentation, analysis reports, and procedural instructions. Learning to document complex engineering work in clear, structured formats that can be understood by colleagues, management, and regulatory authorities improved both written communication skills and the ability to organize technical information logically. The process of creating layup procedures with step-by-step instructions, material specifications, and quality checkpoints taught the importance of precise, unambiguous technical writing where errors or omissions could lead to manufacturing defects or safety issues.
Presenting technical findings and design decisions to senior engineers and project stakeholders developed verbal communication skills and the ability to explain complex technical concepts to audiences with varying levels of expertise. Learning to use visual aids such as CAD models, analysis results plots, and photographs of manufacturing processes effectively enhanced presentation skills. The experience of defending design choices based on quantitative analysis and engineering principles, responding to technical questions, and incorporating feedback into revised designs taught the collaborative nature of engineering work and the importance of clear communication in achieving consensus on technical matters.

Problem-Solving and Critical Thinking

The internship presented numerous technical challenges that developed problem-solving capabilities and critical thinking skills. Encountering issues such as composite layup defects requiring root cause analysis, structural analysis results that initially failed to meet requirements

necessitating design iteration, and manufacturing constraints that conflicted with optimal structural designs taught systematic troubleshooting approaches. Learning to break down complex problems into manageable components, identify root causes rather than treating symptoms, and develop multiple solution alternatives for evaluation strengthened analytical thinking abilities.
The experience of balancing competing design requirements—such as minimizing weight while achieving required strength, optimizing aerodynamic performance while maintaining structural integrity, and achieving desired performance within manufacturing and cost constraints—developed the ability to think holistically about engineering trade-offs. Understanding that engineering design rarely has single ”correct” answers but rather involves optimizing within a multi-dimensional design space with conflicting objectives taught valuable judgment and decision-making skills. Learning to use quantitative methods such as finite element analysis and design of experiments to inform decisions while recognizing the limitations of models and the importance of engineering judgment developed a balanced, practical approach to problem-solving.

Project Management and Time Management

Working on aircraft development with defined milestones, deliverables, and schedules developed project management awareness and time management skills. Learning to estimate task durations, identify critical path activities, and manage dependencies between different work packages provided insight into project planning. The experience of sometimes falling behind schedule due to unexpected technical challenges or learning curves, then working to recover schedule through focused effort or process improvements, taught realistic project management where adaptation and problem-solving are constants rather than exceptions.
Balancing multiple concurrent activities such as CAD modeling, structural analysis, manufacturing support, and documentation development required prioritization skills and the ability to switch contexts efficiently. Learning to identify which tasks required immediate attention versus those that could be deferred, understanding when to ask for help versus investing time in independent problem-solving, and recognizing when perfectionism was counterproductive versus when additional refinement added genuine value developed practical time management judgment. The experience of working toward deadlines while maintaining quality standards taught the discipline and focus essential in professional engineering practice.

Teamwork and Collaboration

The collaborative nature of aircraft development provided extensive opportunities to develop teamwork skills. Working with colleagues from different engineering disciplines—aerodynamics, structures, propulsion, avionics, and manufacturing—illustrated how modern aerospace projects require cross-functional collaboration where no individual possesses all necessary expertise. Learning to communicate effectively with specialists in other domains, understand their requirements and constraints, and negotiate solutions that satisfy multiple stakeholder needs developed interpersonal skills and collaborative work habits.
Participating in design reviews where team members critically evaluated proposed designs taught the value of diverse perspectives in identifying potential issues and generating innova-

tive solutions. Learning to accept constructive criticism of one's work without defensiveness, to provide feedback to colleagues in respectful and productive ways, and to build on others' ideas rather than dismissing them developed professional maturity. The experience of contributing individual technical work to a larger team effort, where the success of the overall project depended on everyone fulfilling their responsibilities and supporting teammates when challenges arose, reinforced the importance of reliability, communication, and mutual support in professional teams.

Attention to Detail and Quality Consciousness

Working with aerospace structures and composite materials, where small defects or deviations from specifications can compromise safety, developed exceptional attention to detail. Learning to follow procedures precisely, document work thoroughly, and verify results through multiple methods taught discipline and conscientiousness. The experience of discovering errors in one's own work during review processes and understanding the potential consequences of those errors if they had gone undetected instilled a quality-conscious mindset where getting things right is paramount.

Understanding the rationale behind seemingly tedious requirements such as cleanliness protocols in composite manufacturing, material storage and handling procedures, and comprehensive documentation of all process steps revealed that these practices exist for sound technical and safety reasons. This transformed perception of quality assurance from bureaucratic overhead to essential engineering practice. Learning to perform self-checks, peer reviews, and formal inspections, and to view quality control as everyone's responsibility rather than solely the quality department's role, developed professional habits that will serve throughout an engineering career.

Adaptability and Continuous Learning

The rapidly evolving nature of aerospace technology, particularly in emerging areas such as eVTOL aircraft and advanced composites, required continuous learning and adaptation. Encountering unfamiliar tools, methods, and technologies regularly throughout the internship developed comfort with being a novice and the ability to learn quickly through multiple channels including documentation study, hands-on experimentation, and seeking guidance from experienced colleagues. Learning that even experienced engineers constantly encounter new challenges and acquire new skills normalized the learning process as a career-long journey rather than a phase that ends upon graduation.

Adapting to unexpected changes in project direction, new technical requirements emerging from testing results, and evolving priorities as the development program progressed taught flexibility and resilience. Learning to let go of work that became obsolete due to design changes, to embrace better approaches even when they invalidated previous efforts, and to maintain productivity and positive attitude despite setbacks developed the adaptability essential in dynamic engineering environments.

Chapter 5

References

5.References

1. Anderson, J. D. (2017). *Fundamentals of Aerodynamics* (6th ed.). McGraw-Hill Education.
2. Raymer, D. P. (2018). *Aircraft Design: A Conceptual Approach* (6th ed.). American Institute of Aeronautics and Astronautics.
3. Niu, M. C. Y. (1988). *Airframe Structural Design: Practical Design Information and Data on Aircraft Structures*. Conmilit Press Ltd.
4. Megson, T. H. G. (2016). *Aircraft Structures for Engineering Students* (6th ed.). Butterworth-Heinemann.
5. Bruhn, E. F. (1973). *Analysis and Design of Flight Vehicle Structures*. Jacobs Publishing.
6. Baker, A., Dutton, S., & Kelly, D. (2004). *Composite Materials for Aircraft Structures* (2nd ed.). American Institute of Aeronautics and Astronautics.
7. Barbero, E. J. (2017). *Introduction to Composite Materials Design* (3rd ed.). CRC Press.
8. Mallick, P. K. (2007). *Fiber-Reinforced Composites: Materials, Manufacturing, and Design* (3rd ed.). CRC Press.
9. Campbell, F. C. (2010). *Structural Composite Materials*. ASM International.
10. Gay, D., Hoa, S. V., & Tsai, S. W. (2003). *Composite Materials: Design and Applications* (2nd ed.). CRC Press.
11. Jones, R. M. (1998). *Mechanics of Composite Materials* (2nd ed.). Taylor & Francis.
12. Daniel, I. M., & Ishai, O. (2006). *Engineering Mechanics of Composite Materials* (2nd ed.). Oxford University Press.
13. Mazumdar, S. K. (2001). *Composites Manufacturing: Materials, Product, and Process Engineering*. CRC Press.
14. Strong, A. B. (2008). *Fundamentals of Composites Manufacturing: Materials, Methods and Applications* (2nd ed.). Society of Manufacturing Engineers.
15. Advani, S. G., & Hsiao, K. T. (2012). *Manufacturing Techniques for Polymer Matrix Composites (PMCs)*. Woodhead Publishing.
16. Gutowski, T. G. (1997). *Advanced Composites Manufacturing*. John Wiley & Sons.
17. Kassapoglou, C. (2010). *Design and Analysis of Composite Structures: With Applications to Aerospace Structures*. John Wiley & Sons.

18. Vasiliev, V. V., & Morozov, E. V. (2018). *Advanced Mechanics of Composite Materials and Structures* (4th ed.). Elsevier.

19. Hyer, M. W. (2009). *Stress Analysis of Fiber-Reinforced Composite Materials*. DEStech Publications.

20. Federal Aviation Administration. (2009). *Aviation Maintenance Technician Handbook - Airframe* (Vol. 1). U.S. Department of Transportation.

21. Federal Aviation Administration. (2012). *Composite Aircraft Structure: Advisory Circular AC 20-107B*. U.S. Department of Transportation.

22. ASTM International. (2014). *ASTM D3039: Standard Test Method for Tensile Properties of Polymer Matrix Composite Materials*. ASTM International.

23. ASTM International. (2016). *ASTM D2344: Standard Test Method for Short-Beam Strength of Polymer Matrix Composite Materials*. ASTM International.

24. Abrate, S. (2005). *Impact on Composite Structures*. Cambridge University Press.

25. Carlsson, L. A., & Pipes, R. B. (1996). *Experimental Characterization of Advanced Composite Materials* (3rd ed.). CRC Press.

26. Dexter, H. B., & Baker, D. J. (1994). *Lightning Protection of Aircraft Composite Structures*. NASA Technical Memorandum 109142.

27. Fisher, F. A., & Plumer, J. A. (1977). *Lightning Protection of Aircraft*. NASA Reference Publication 1008.

28. Drela, M., & Youngren, H. (2001). *XFOIL 6.94 User Guide*. MIT Aero & Astro.

29. Abbott, I. H., & Von Doenhoff, A. E. (1959). *Theory of Wing Sections: Including a Summary of Airfoil Data*. Dover Publications.

30. McCormick, B. W. (1995). *Aerodynamics, Aeronautics, and Flight Mechanics* (2nd ed.). John Wiley & Sons.

31. Roskam, J. (1985). *Airplane Design: Part V - Component Weight Estimation*. DARcorporation.

32. Torenbeek, E. (2013). *Advanced Aircraft Design: Conceptual Design, Analysis and Optimization of Subsonic Civil Airplanes*. John Wiley & Sons.

33. Curtis, H. D. (2006). *Fundamentals of Aircraft Structural Analysis*. McGraw-Hill Education.

34. Sun, C. T. (1998). *Mechanics of Aircraft Structures*. John Wiley & Sons.

35. Donaldson, B. K. (1993). *Analysis of Aircraft Structures: An Introduction*. McGraw-Hill.

36. Dassault Systèmes. (2020). *CATIA Composites Design User's Guide*. Dassault Systèmes.

37. Hexcel Corporation. (2016). *HexPly 8552 Product Data Sheet*. Hexcel Corporation.

38. Cytec Industries. (2012). *CYCOM 5320-1 Epoxy Resin System Technical Data Sheet*. Cytec Engineered Materials.

39. Society of Automotive Engineers. (2010). *SAE AIR4844: Composites and Metal Bonding Glossary*. SAE International.

40. Federal Aviation Administration. (2019). *Airworthiness Standards: Normal Category Rotorcraft - 14 CFR Part 27*. U.S. Department of Transportation.