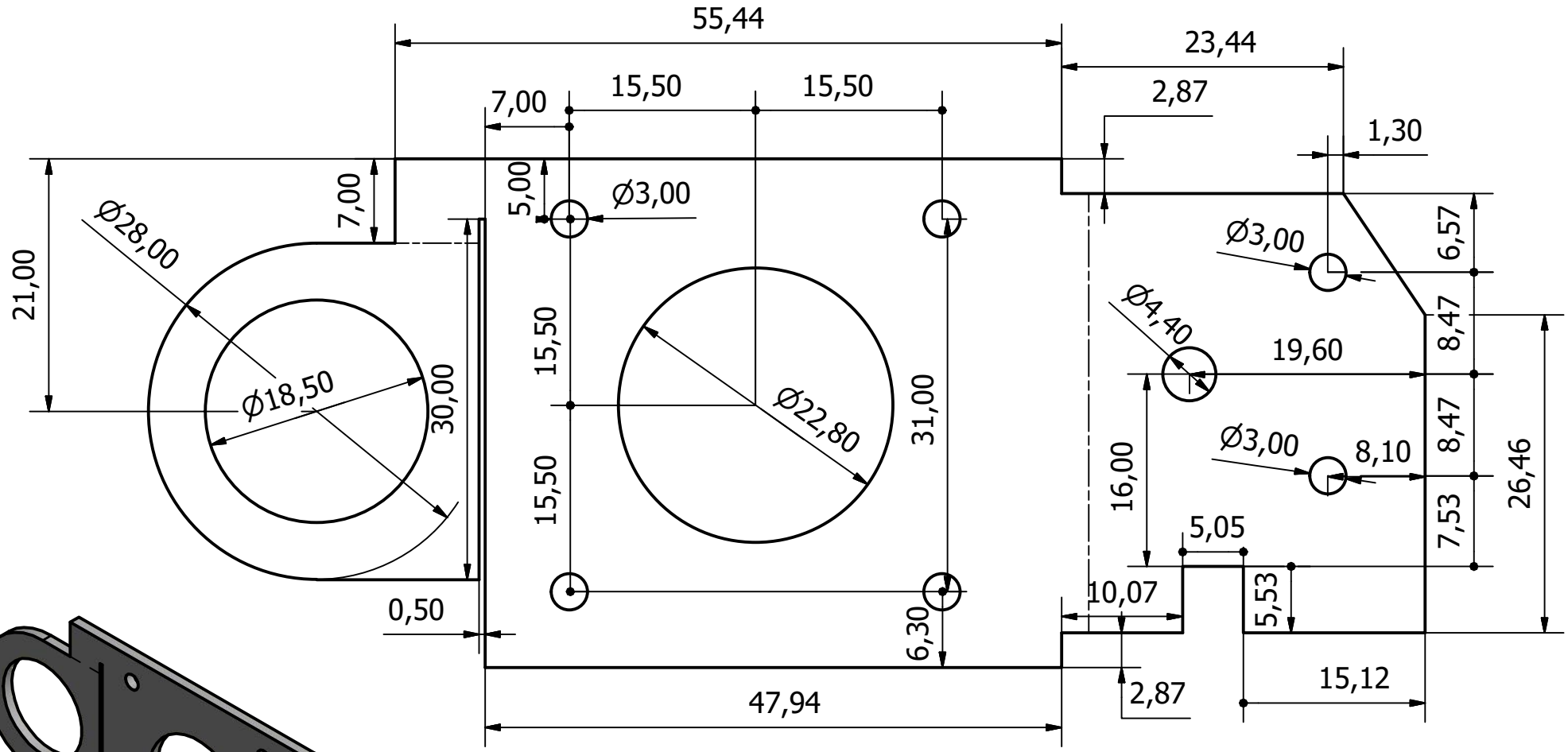

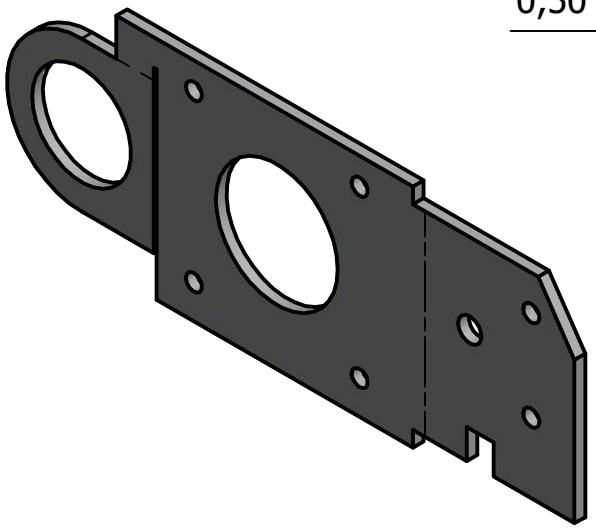

Designed by	Checked by	Approved by	Date		Date	
None					22-Jun-16	

Unfolded sheet drawing and shaded bended and unfolded reference views	MK8 Bracket for Prusa i3 metal		
	MK8 Bracket	Edition	Sheet 1 / 2