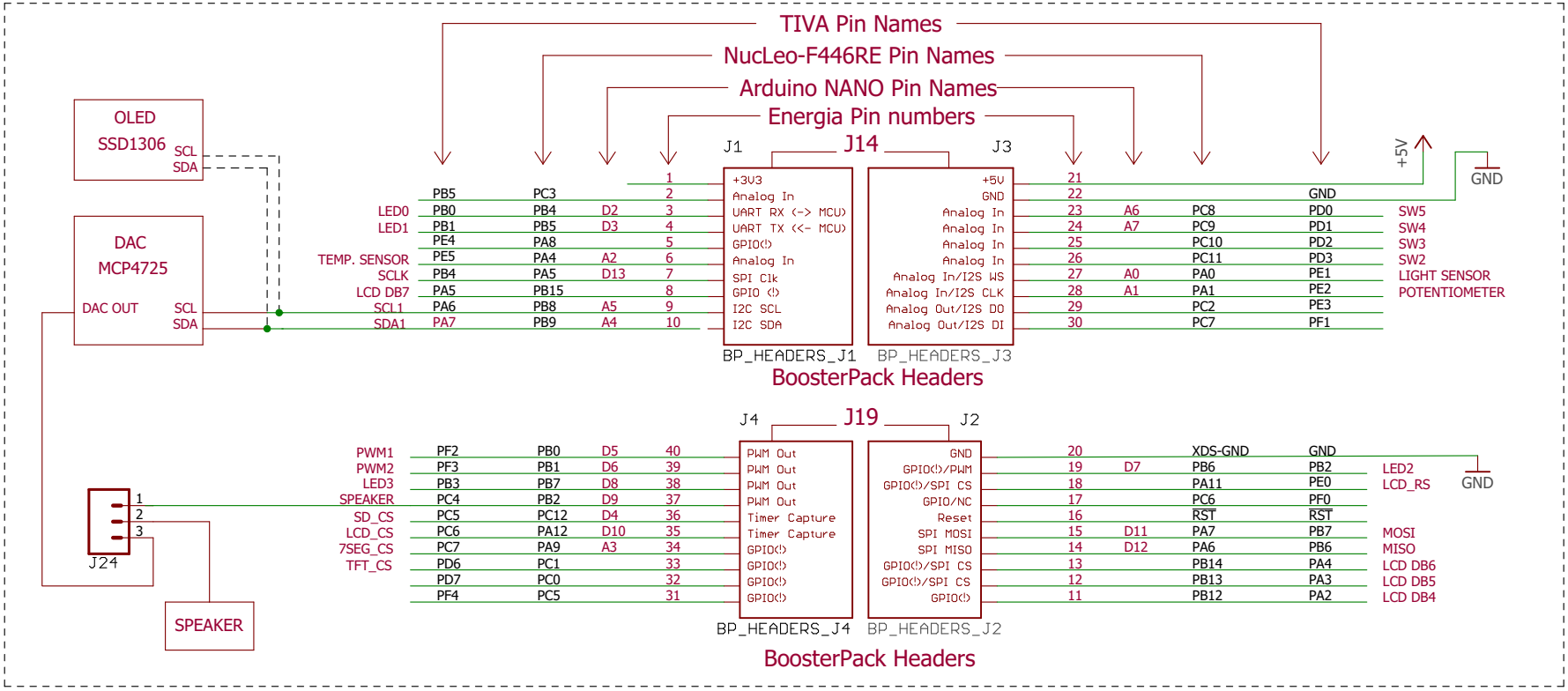
TIVA Pin Names
NucLeo-F446RE Pin Names
Arduino NANO Pin Names
Energia Pin numbers
OLED
SSD1306
SCL
SDA
DAC
MCP4725
DAC OUT
SCL
SDA
J1
J14
J3
+5V
GND
LED0
LED1
TEMP. SENSOR
SCLK
LCD DB7
SCL1
SDA1
PB5 PC3 1 +3V3
PB0 PB4 D2 3 UART RX (-> MCU)
PB1 PB5 D3 4 UART TX (<- MCU)
PE4 PA8 5 GPIO(!)
PE5 PA4 A2 6 Analog In
PB4 PA5 D13 7 SPI Clk
PA5 PB15 8 GPIO (!)
PA6 PB8 A5 9 I2C SCL
PA7 PB9 A4 10 I2C SDA
+5V 21
GND 22 GND
Analog In 23 A6 PC8 PD0 SW5
Analog In 24 A7 PC9 PD1 SW4
Analog In 25 PC10 PD2 SW3
Analog In 26 PC11 PD3 SW2
Analog In/I2S WS 27 A0 PA0 PE1 LIGHT SENSOR
Analog In/I2S CLK 28 A1 PA1 PE2 POTENTIOMETER
Analog Out/I2S DO 29 PC2 PE3
Analog Out/I2S DI 30 PC7 PF1
BP_HEADERS_J1
BP_HEADERS_J3
BoosterPack Headers
J4
J19
J2
PWM1
PWM2
LED3
SPEAKER
SD_CS
LCD_CS
7SEG_CS
TFT_CS
PF2 PB0 D5 40 PWM Out
PF3 PB1 D6 39 PWM Out
PB3 PB7 D8 38 PWM Out
PC4 PB2 D9 37 PWM Out
PC5 PC12 D4 36 Timer Capture
PC6 PA12 D10 35 Timer Capture
PC7 PA9 A3 34 GPIO(!)
PD6 PC1 33 GPIO(!)
PD7 PC0 32 GPIO(!)
PF4 PC5 31 GPIO(!)
GND 20 XDS-GND GND
GPIO(!)/PWM 19 D7 PB6 PB2 LED2
GPIO(!)/SPI CS 18 PA11 PE0 LCD_RS
GPIO/NC 17 PC6 PF0
Reset 16 RST RST
SPI MOSI 15 D11 PA7 PB7 MOSI
SPI MISO 14 D12 PA6 PB6 MISO
GPIO(!)/SPI CS 13 PB14 PA4 LCD DB6
GPIO(!)/SPI CS 12 PB13 PA3 LCD DB5
GPIO(!) 11 PB12 PA2 LCD DB4
GND
1
2
3
J24
SPEAKER
BP_HEADERS_J4
BP_HEADERS_J2
BoosterPack Headers

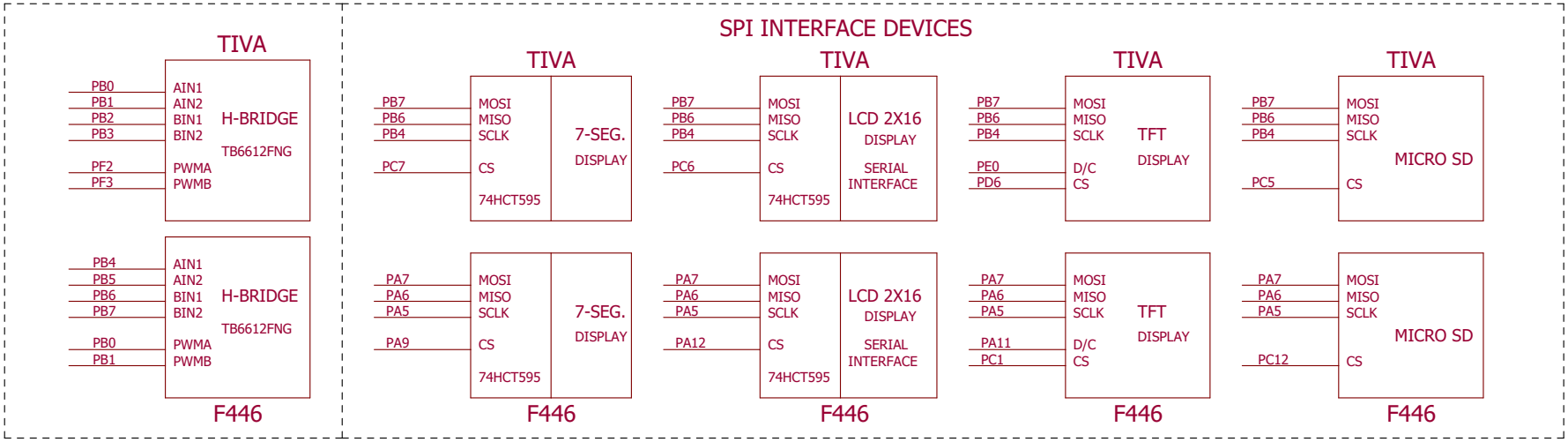
SPI INTERFACE DEVICES
TIVA
PB0 AIN1
PB1 AIN2
PB2 BIN1
PB3 BIN2
H-BRIDGE
TB6612FNG
PF2 PWMA
PF3 PWMB
F446
PB4 AIN1
PB5 AIN2
PB6 BIN1
PB7 BIN2
H-BRIDGE
TB6612FNG
PB0 PWMA
PB1 PWMB
F446
TIVA
PB7 MOSI
PB6 MISO
PB4 SCLK
PC7 CS
7-SEG.
DISPLAY
74HCT595
F446
TIVA
PB7 MOSI
PB6 MISO
PB4 SCLK
PC6 CS
LCD 2X16
DISPLAY
SERIAL
INTERFACE
74HCT595
F446
TIVA
PB7 MOSI
PB6 MISO
PB4 SCLK
PE0 D/C
PD6 CS
TFT
DISPLAY
F446
TIVA
PB7 MOSI
PB6 MISO
PB4 SCLK
PC5 CS
MICRO SD
F446
PA7 MOSI
PA6 MISO
PA5 SCLK
PA9 CS
7-SEG.
DISPLAY
74HCT595
F446
PA7 MOSI
PA6 MISO
PA5 SCLK
PA12 CS
LCD 2X16
DISPLAY
SERIAL
INTERFACE
74HCT595
F446
PA7 MOSI
PA6 MISO
PA5 SCLK
PA11 D/C
PC1 CS
TFT
DISPLAY
F446
PA7 MOSI
PA6 MISO
PA5 SCLK
PC12 CS
MICRO SD
F446