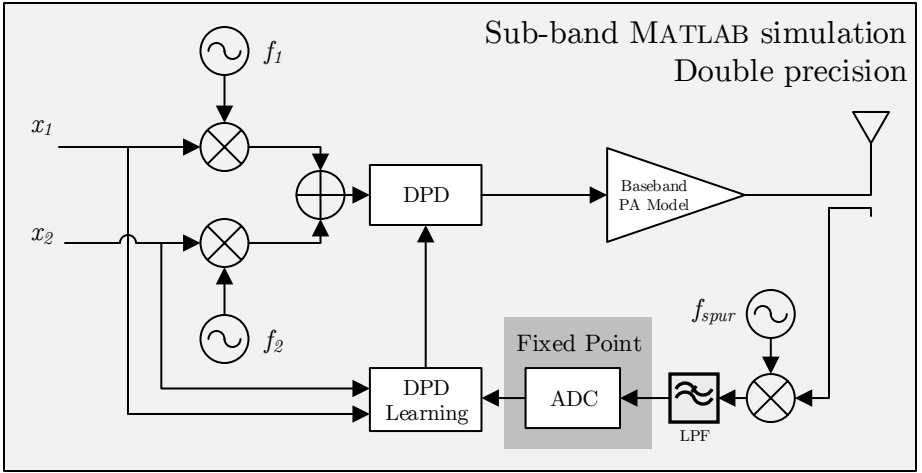
Sub-band MATLAB simulation
Double precision
f_1
x_1
x_2
f_2
DPD
Baseband
PA Model
f_{spur}
Fixed Point
DPD
Learning
ADC
LPF