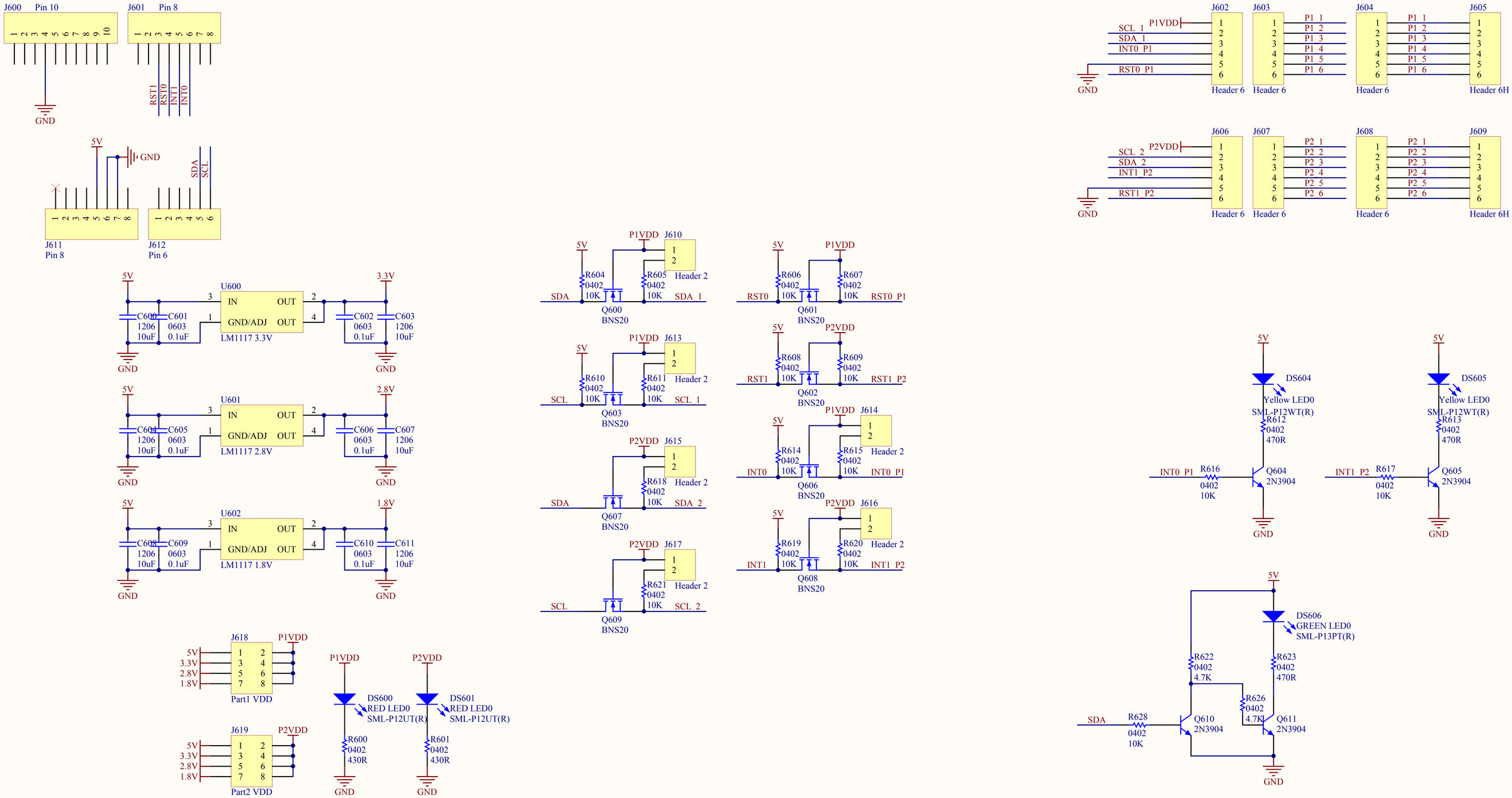

Title		
Size A3	Number	Revision
Date: 2016/12/12		Sheet of
File: C:\Documents and Settings\..\Arduino Shield.SchDoc		

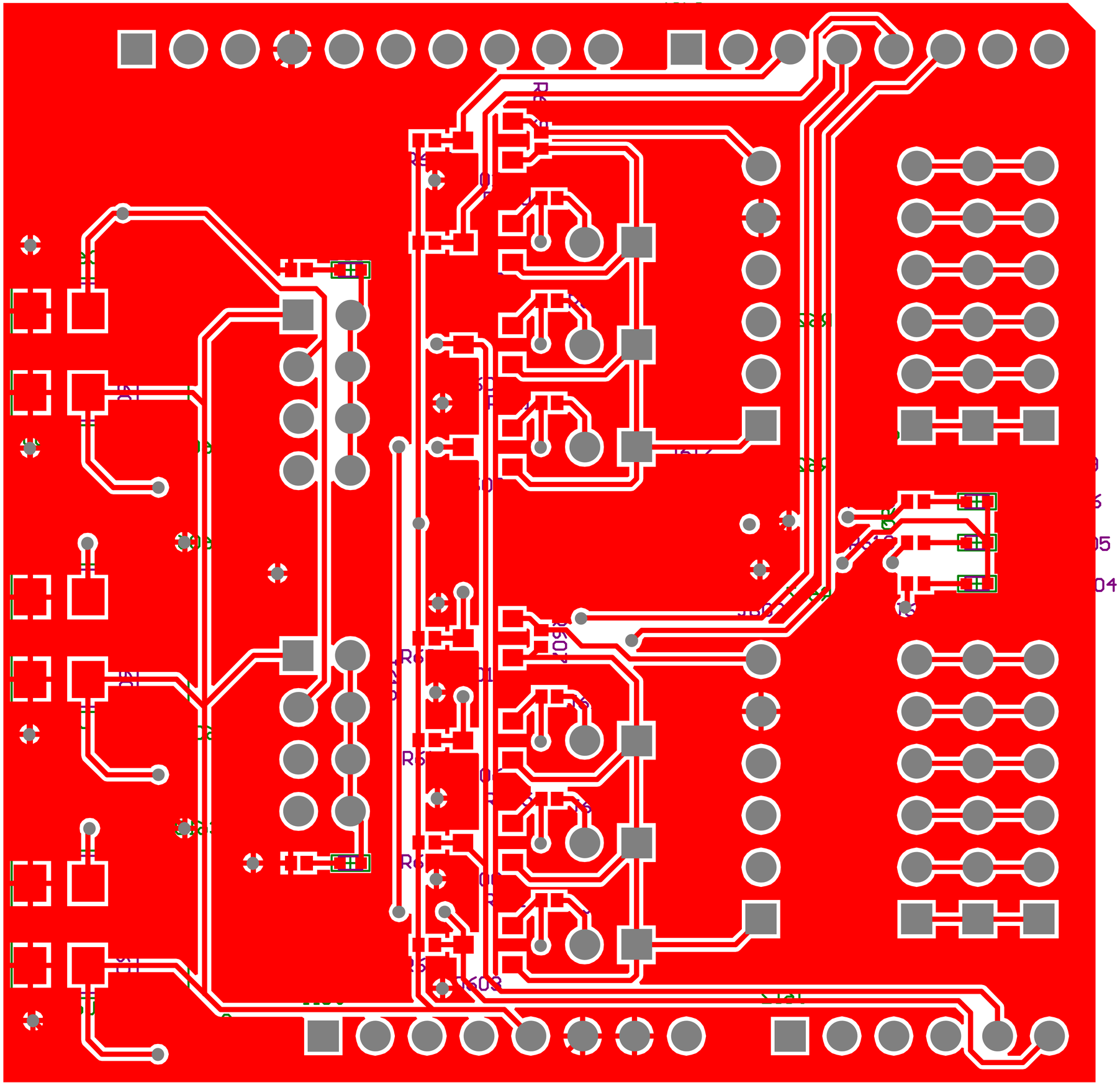
R6
R6
R6

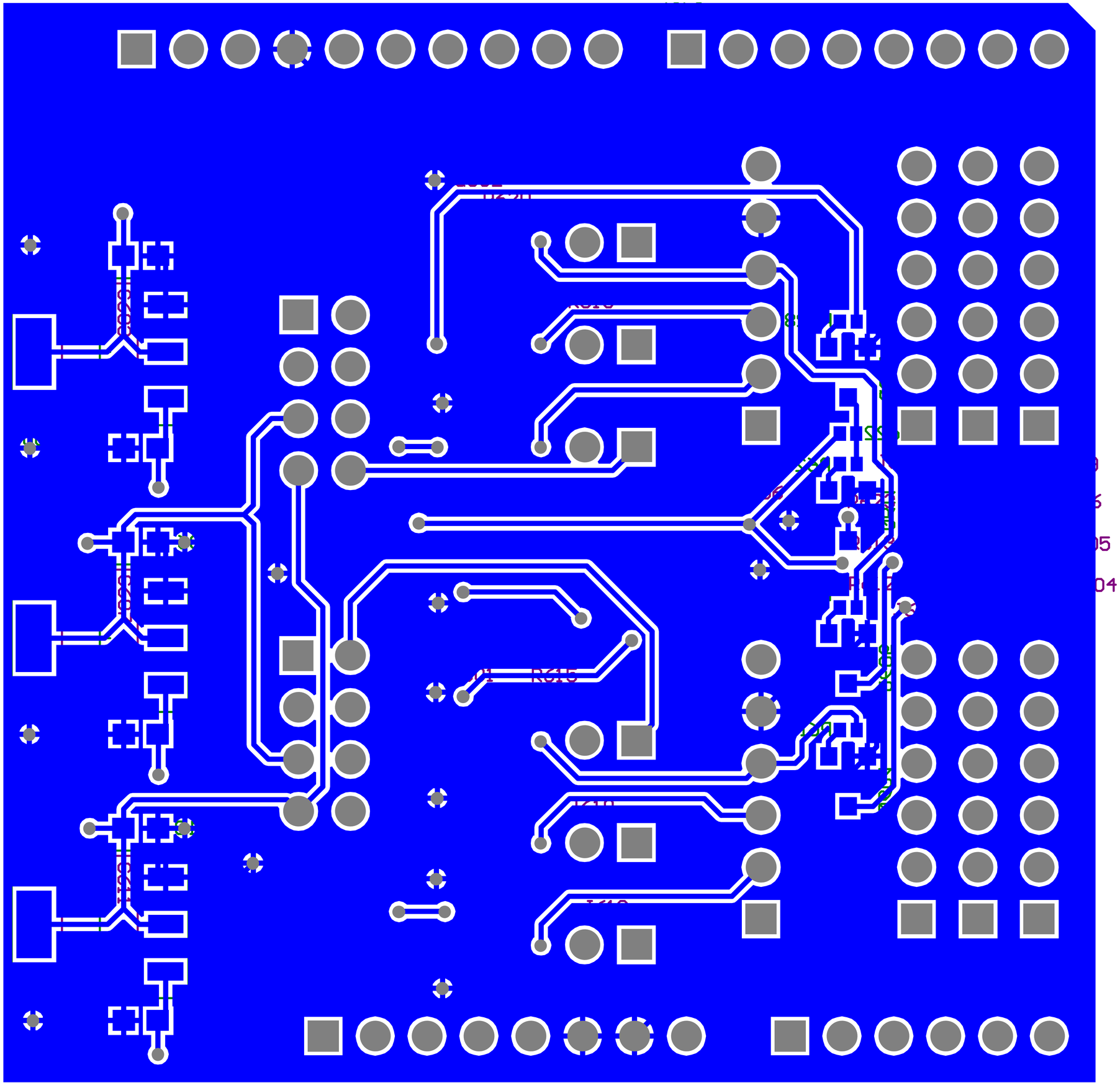

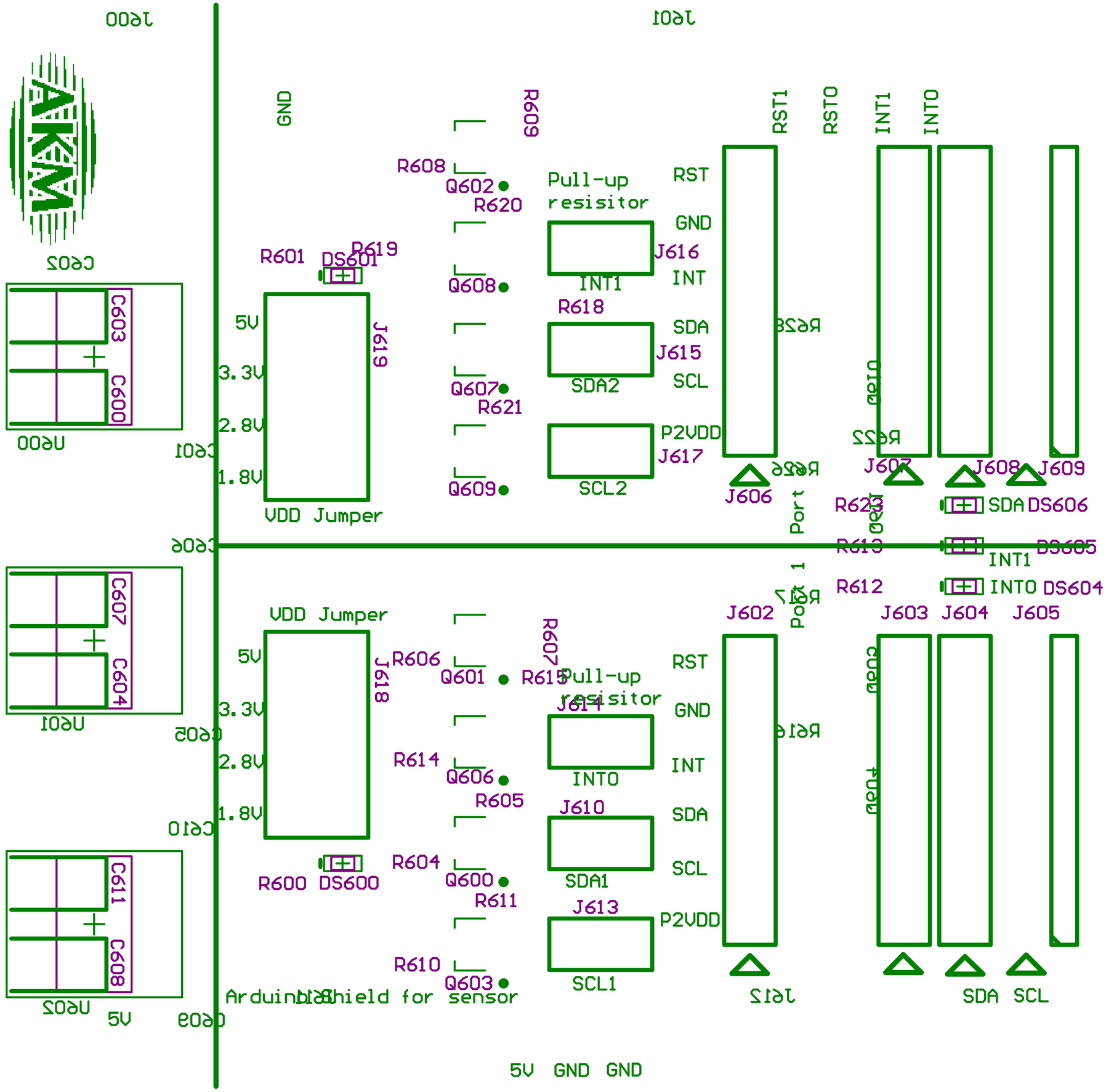
GND
R609
RST1
RST0
INT1
INT0
R608
Q602
R620
Pull-up
resisitor
RST
GND
J616
INT1
INT
R601
DS601
R619
Q608
R618
5V
J619
SDA
J615
3.3V
SDA2
SCL
Q607
R621
2.8V
P2VDD
J617
1.8V
Q609
SCL2
J606
J607
J608
J609
VDD Jumper
SDA
DS606
R613
INT1
DS605
R612
INT0
DS604
J602
J603
J604
J605
VDD Jumper
R606
R607
Q601
R615
Pull-up
resisitor
RST
J614
GND
R614
Q606
INT0
INT
R605
J610
SDA
R604
SDA1
SCL
Q600
R611
J613
P2VDD
R610
Q603
SCL1
R600
DS600
J612
SDA
SCL
Arduino Shield for sensor
5V
GND
GND
C603
C600
C607
C604
C611
C608
5V

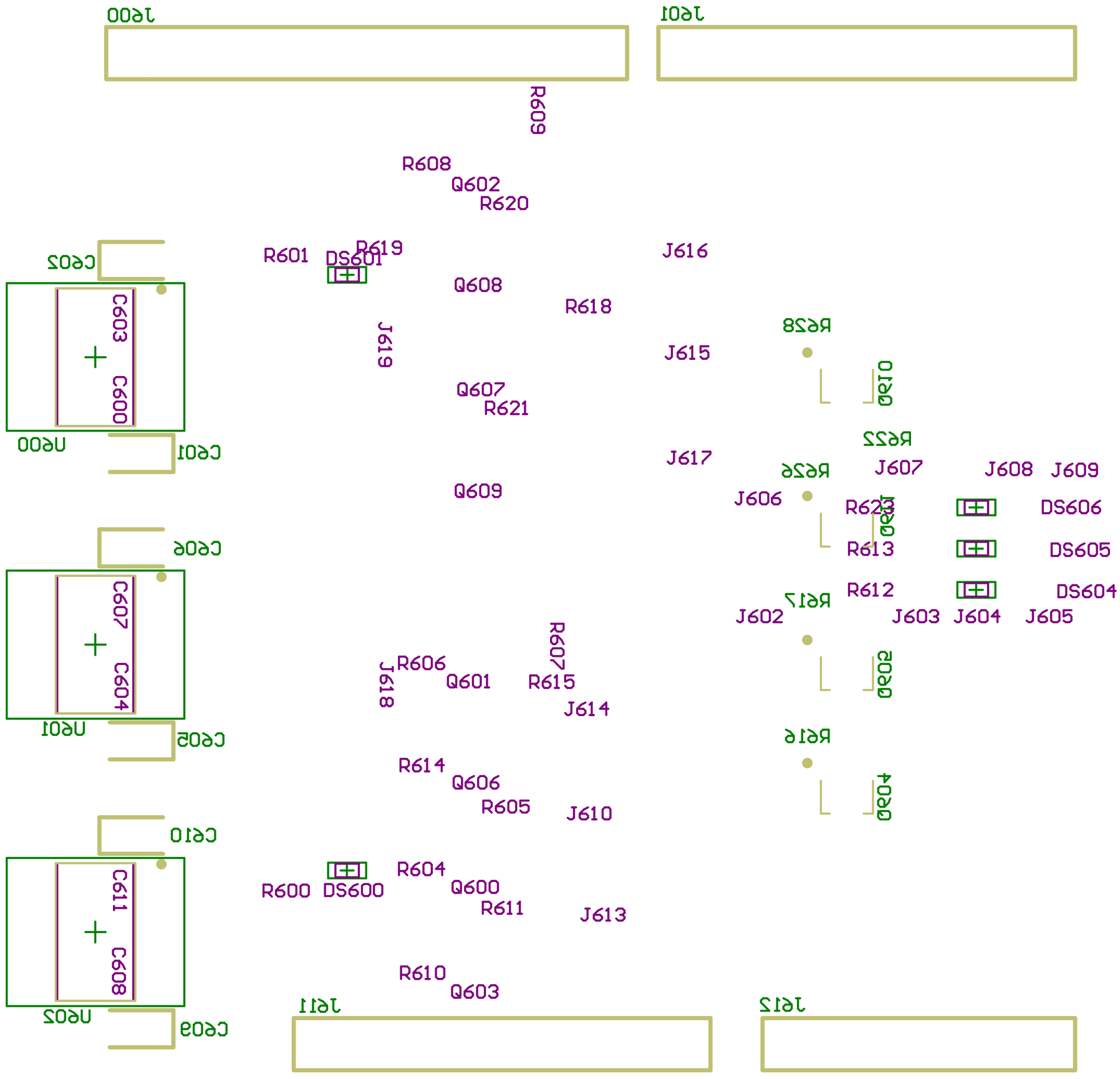
1600
1601
R609
R608
Q602
R620
C602
R601
DS601
R619
J616
Q608
R618
C603
J619
R628
J615
C600
Q607
R621
Q610
U600
C601
R622
J617
J607
J608
J609
R626
Q609
J606
R623
DS606
Q613
C606
R613
DS605
R612
DS604
R617
J602
J603
J604
J605
C607
R607
R606
Q601
R615
Q612
C604
J618
J614
U601
C605
R616
R614
Q606
Q604
R605
J610
C610
R604
DS600
R600
Q600
C611
R611
J613
C608
R610
Q603
U602
C609
1611
1612

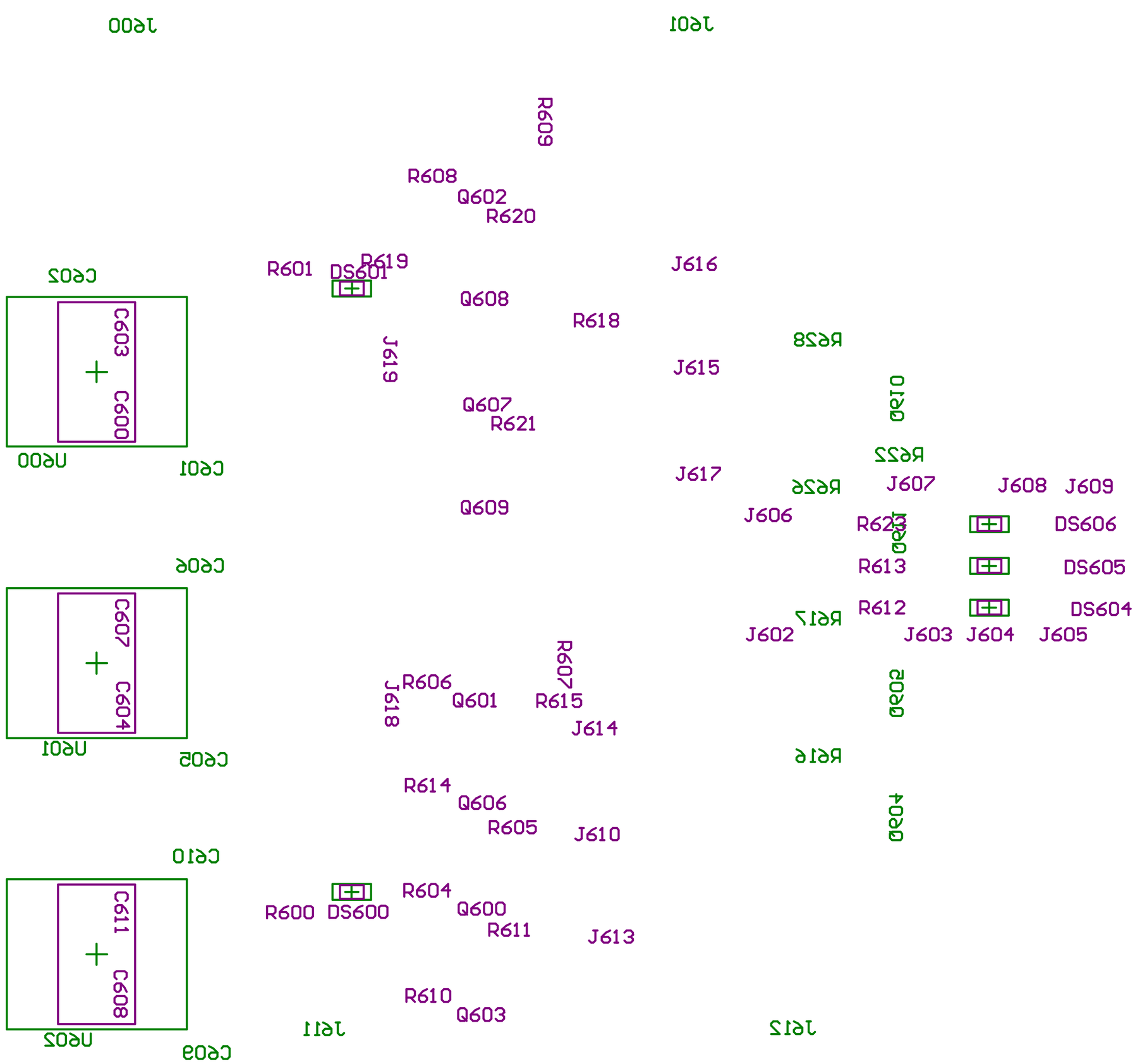
1600
1601
R609
R608
Q602
R620
R601
DS601
R619
J616
C602
Q608
R618
C603
J619
R628
J615
C600
Q607
R621
Q610
U600
C601
R622
J617
J607
J608
J609
R626
Q609
J606
R623
DS606
Q611
C606
R613
DS605
R612
DS604
R617
J602
J603
J604
J605
C607
R607
R606
Q601
R615
J618
Q620
C604
J614
U601
C605
R616
R614
Q606
Q620
R605
J610
C610
R604
DS600
R600
Q600
R611
J613
C611
C608
R610
Q603
U602
1611
1612
C609

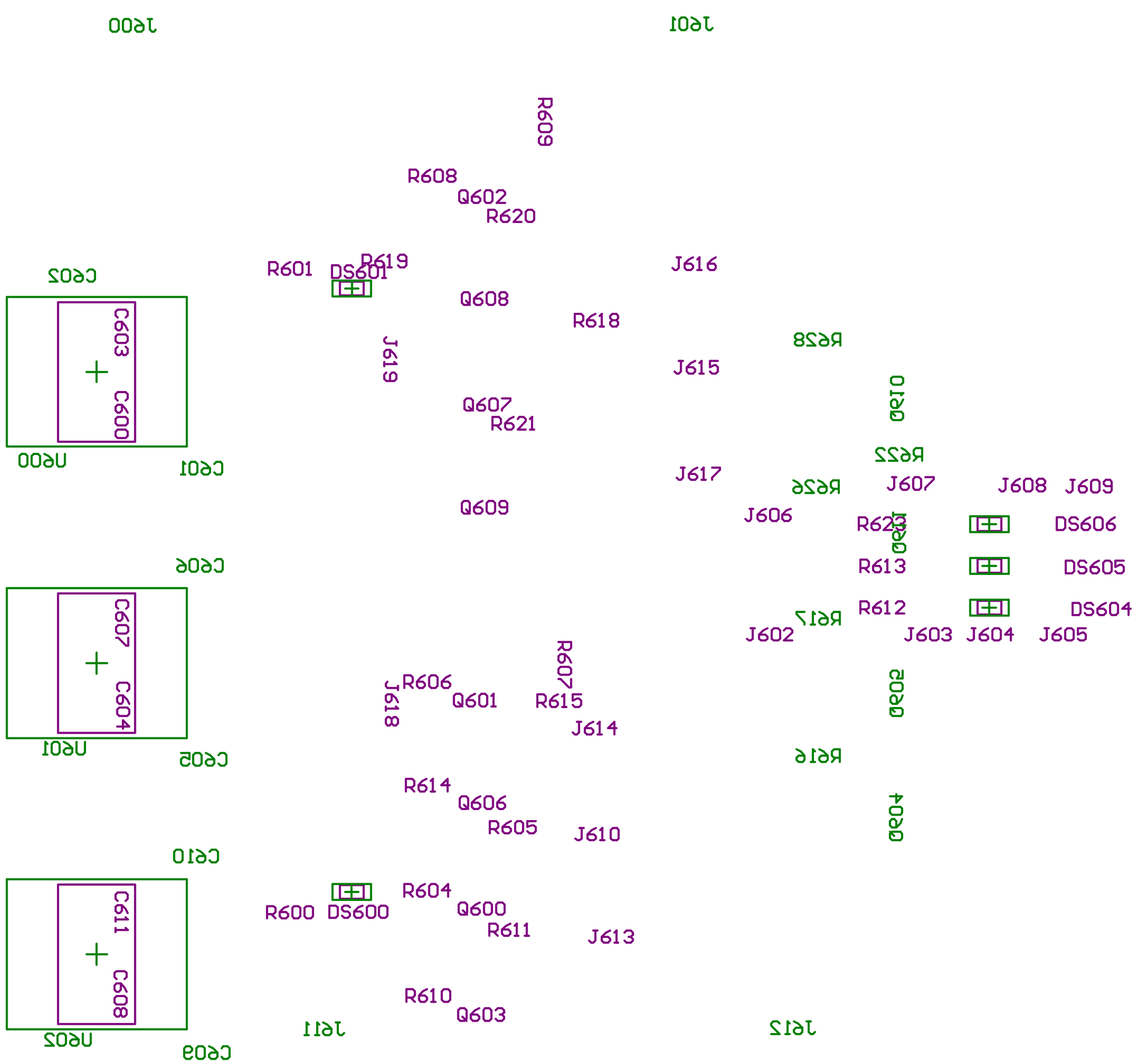
1600
1601
R609
R608
Q602
R620
R601
DS601
R619
J616
C602
Q608
R618
C603
J619
R628
J615
C600
Q607
R621
U600
C601
R622
J617
R626
J607
J608
J609
Q609
J606
R623
DS606
C606
R613
DS605
R612
DS604
R617
J602
J603
J604
J605
C607
R607
R606
J618
Q601
R615
C604
J614
U601
C605
R616
R614
Q606
R605
J610
C610
R604
R600
DS600
Q600
R611
J613
C611
R610
Q603
C608
1611
1612
U602
C609

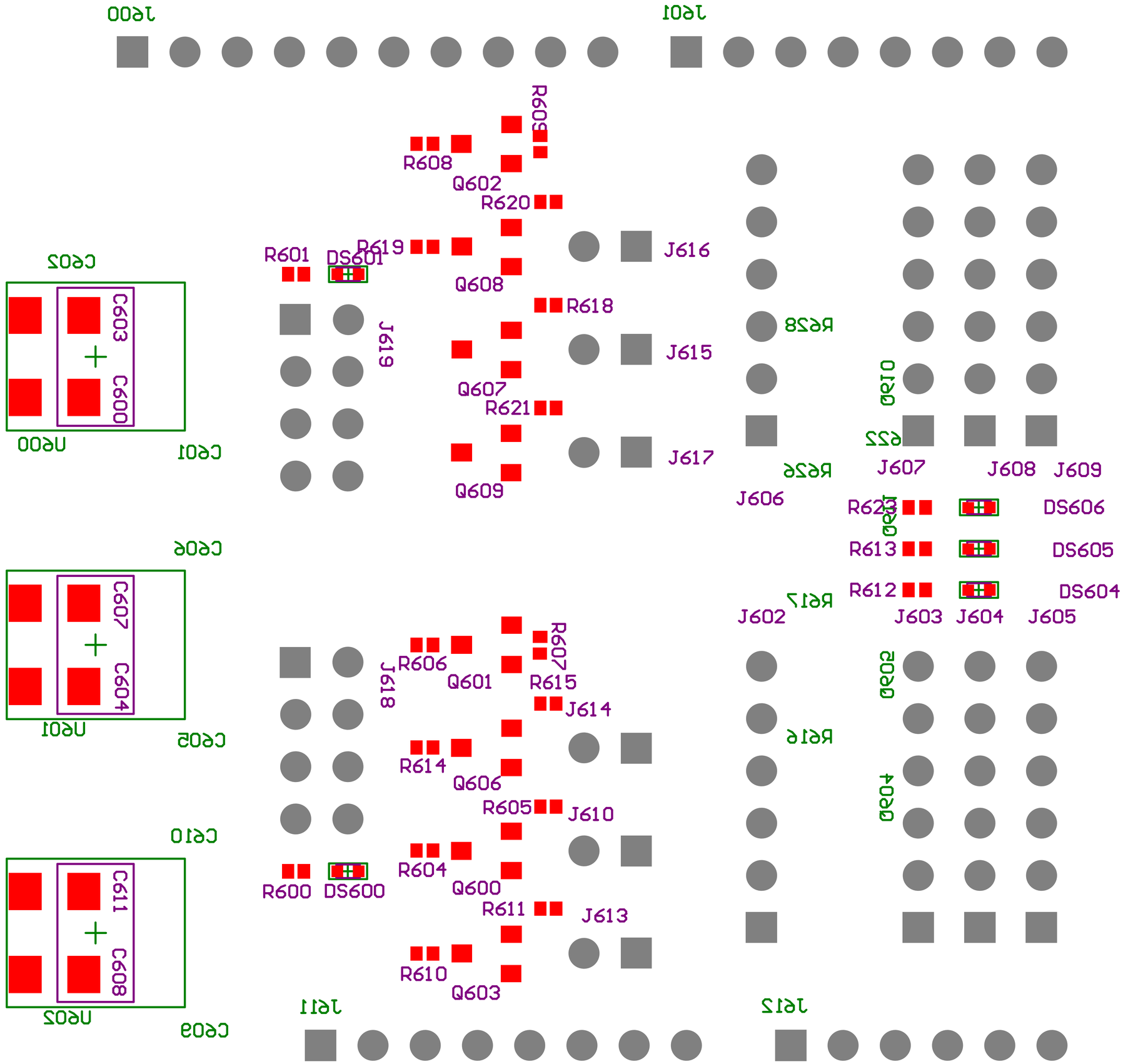
1600
1601
R609
R608
Q602
R620
R619
R601
DS601
Q608
J616
C602
C603
C600
U600
C601
J619
R618
R628
J615
Q607
R621
J617
Q609
R626
J606
0R10
R22
J607
J608
J609
R623
DS606
0R10
R613
DS605
C606
C607
C604
U601
C605
R612
DS604
R617
J602
J603
J604
J605
R606
Q601
R607
R615
J618
J614
0R20
R616
R614
Q606
0R20
R605
J610
C610
C611
C608
U602
C609
R604
Q600
R600
DS600
R611
J613
R610
Q603
1611
1612

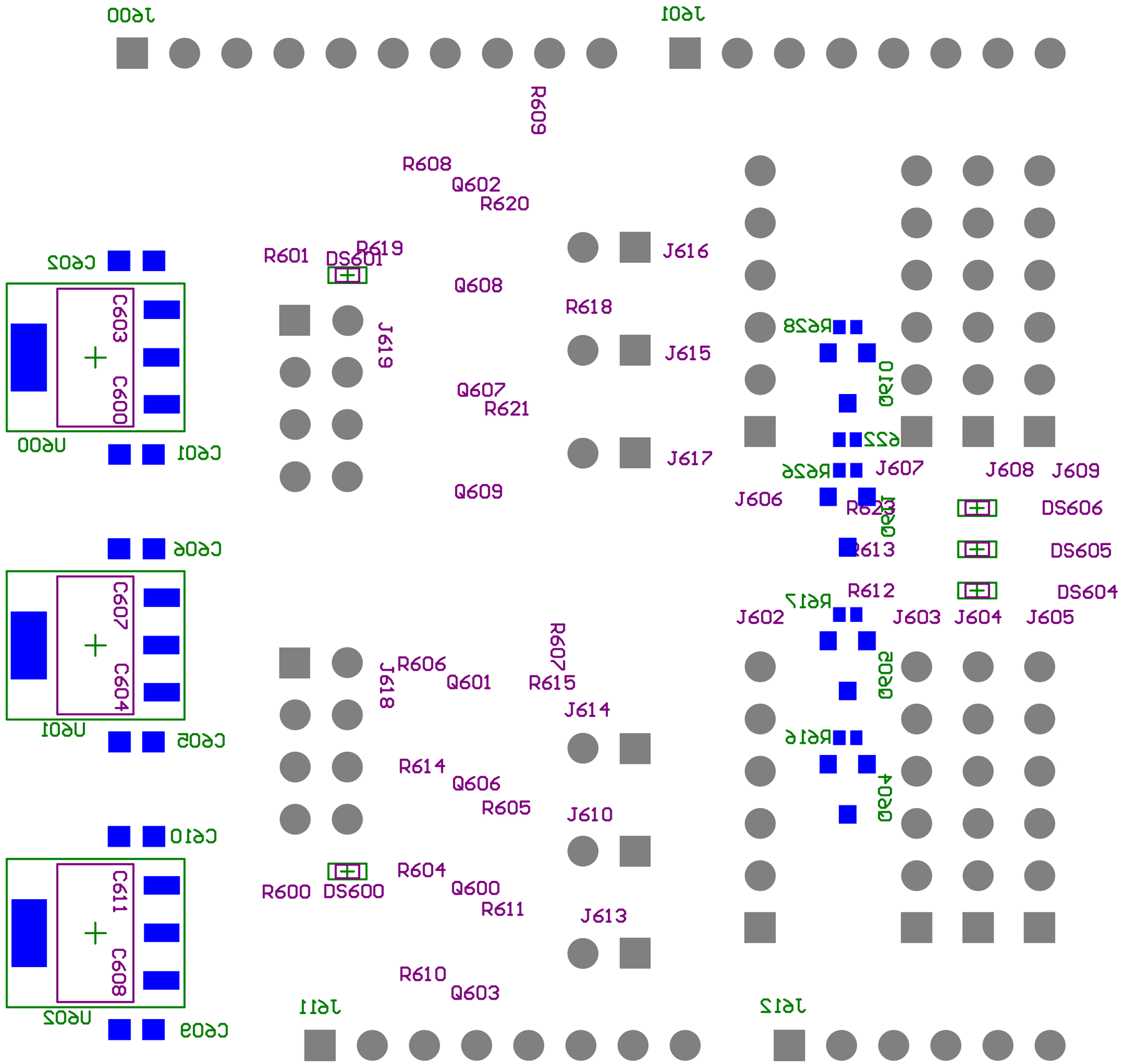
1600
1601
R609
R608
Q602
R620
R601
DS601
R619
C602
J616
Q608
R618
J619
R628
J615
C603
C600
Q607
R621
Q610
U600
C601
R622
J617
R626
J607
J608
J609
Q609
J606
R623
DS606
Q611
R613
C606
DS605
R612
DS604
R617
J602
J603
J604
J605
R607
R606
J618
Q601
R615
Q620
C607
C604
J614
U601
C605
R616
R614
Q606
Q621
R605
J610
C610
C611
C608
R604
R600
DS600
Q600
R611
J613
U602
C609
R610
Q603
1611
1612

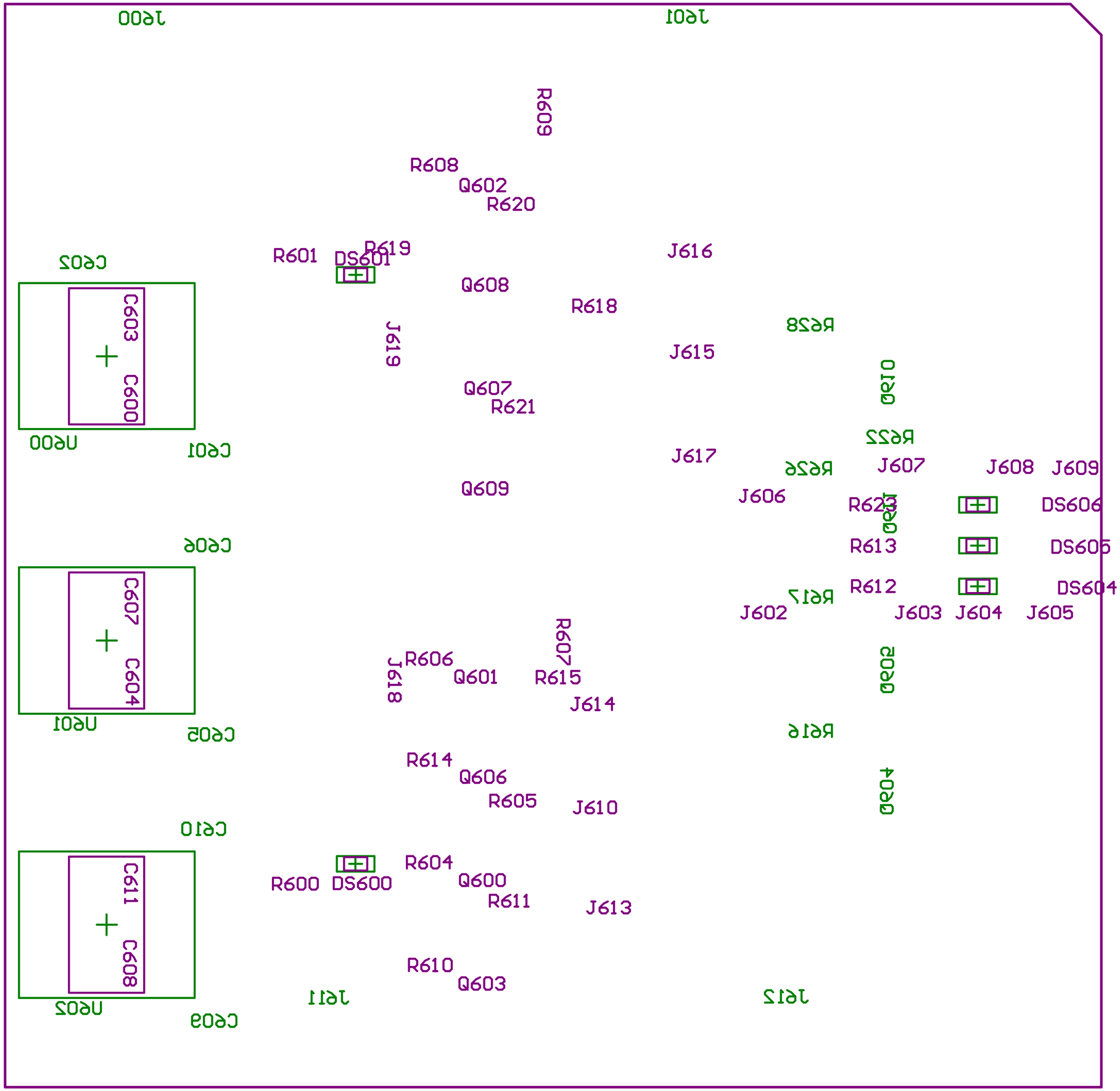
1600
1601
R609
R608
Q602
R620
R601
DS601
R619
J616
C602
C603
C600
Q608
R618
R628
J619
J615
Q610
Q607
R621
U600
C601
R622
J617
R626
J607
J608
J609
Q609
J606
R623
DS606
Q603
C606
R613
DS605
R612
DS604
R617
J602
J603
J604
J605
C607
C604
R607
Q605
R606
Q601
R615
J618
J614
U601
C605
R616
R614
Q606
Q604
R605
J610
C610
C611
C608
R604
DS600
R600
Q600
R611
J613
R610
Q603
U602
C609
1611
1612

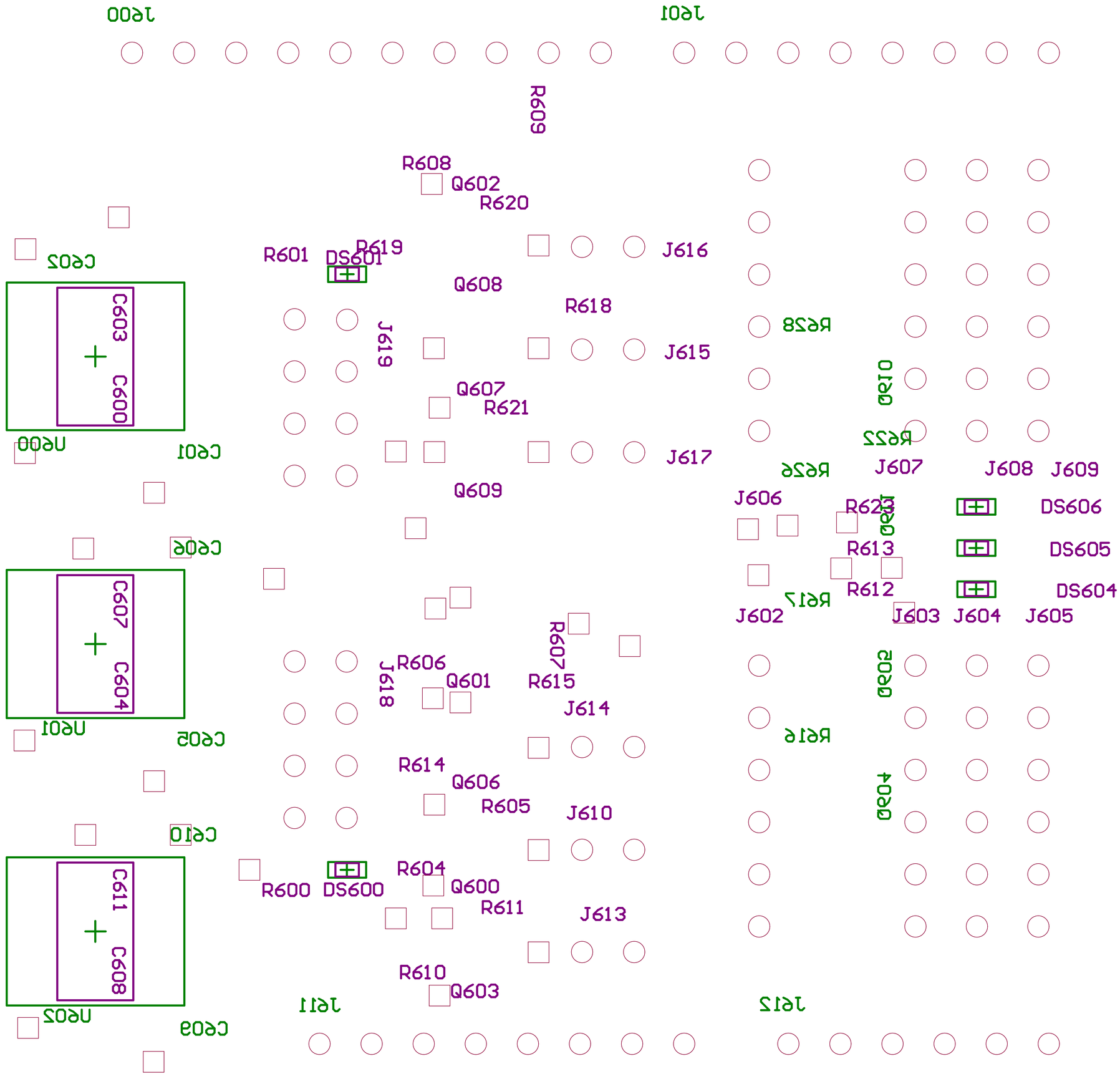
1600
1601
R609
R608
Q602
R620
C602
R601
DS601
R619
J616
Q608
R618
R628
C603
C600
J619
J615
Q607
R621
R622
U600
C601
J617
R626
J607
J608
J609
Q609
J606
R623
DS606
C606
R613
DS605
R612
DS604
R617
J602
J603
J604
J605
R607
C607
C604
R606
Q601
R615
J618
J614
U601
C605
R616
R614
Q606
R605
J610
C610
C611
C608
R604
R600
DS600
Q600
R611
J613
R610
Q603
U602
C609
1611
1612

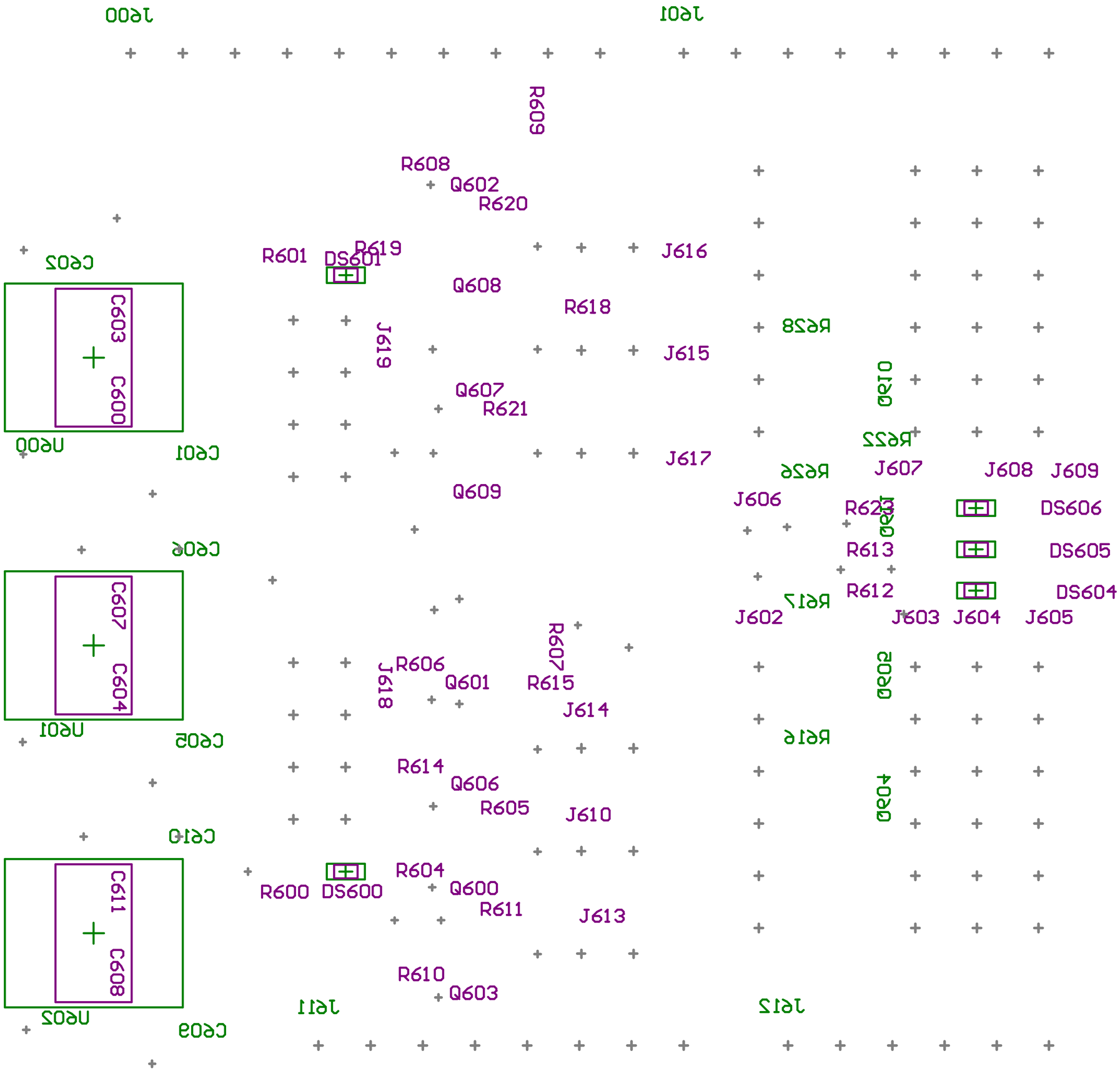
1600
1601
R609
R608
Q602
R620
C602
R601
DS601
R619
J616
Q608
R618
R628
C603
C600
J619
J615
Q607
R621
Q610
U600
C601
R622
J617
R626
J607
J608
J609
Q609
J606
R623
DS606
C606
R613
DS605
R612
DS604
R617
J602
J603
J604
J605
C607
C604
R607
R606
J618
Q601
R615
Q620
U601
C605
J614
R616
R614
Q606
Q630
R605
J610
C610
C611
C608
R604
R600
DS600
Q600
R611
J613
R610
Q603
U602
C609
1611
1612