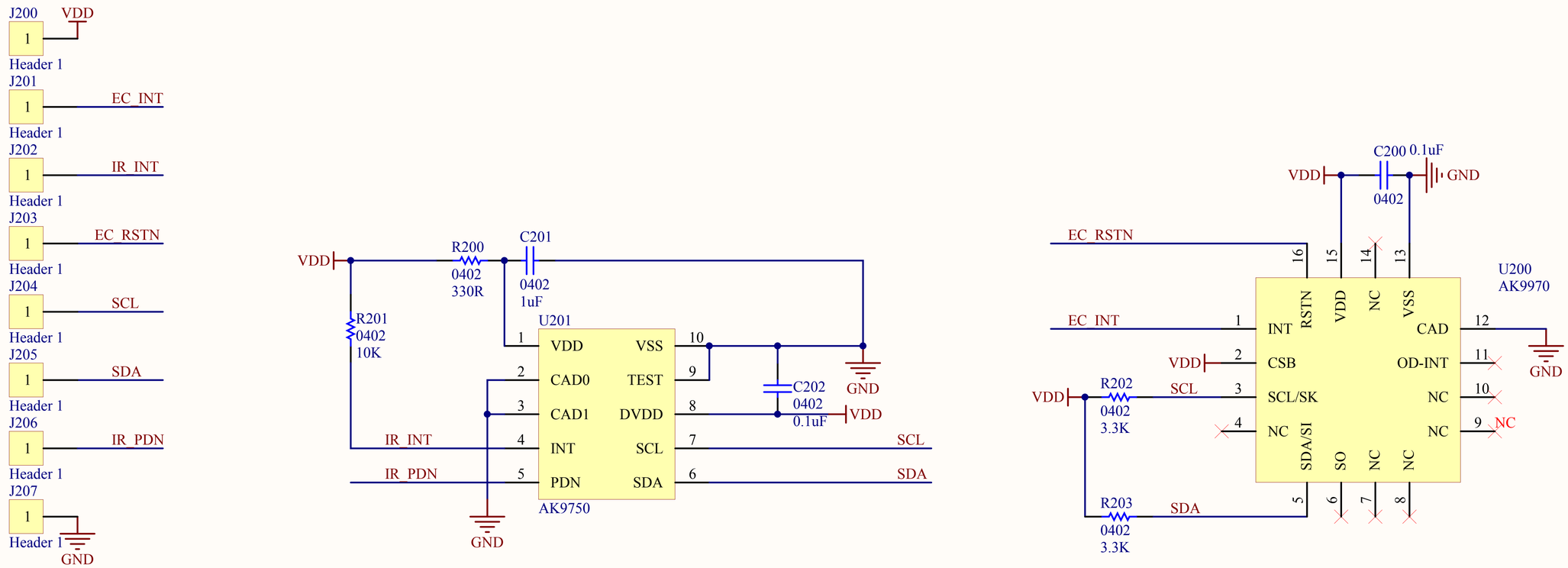

Title		
Size A4	Number	Revision
Date: 2016/12/6		Sheet of
File: C:\Documents and Settings\..\IREC2.54mod.SchDoc		Drawn By:

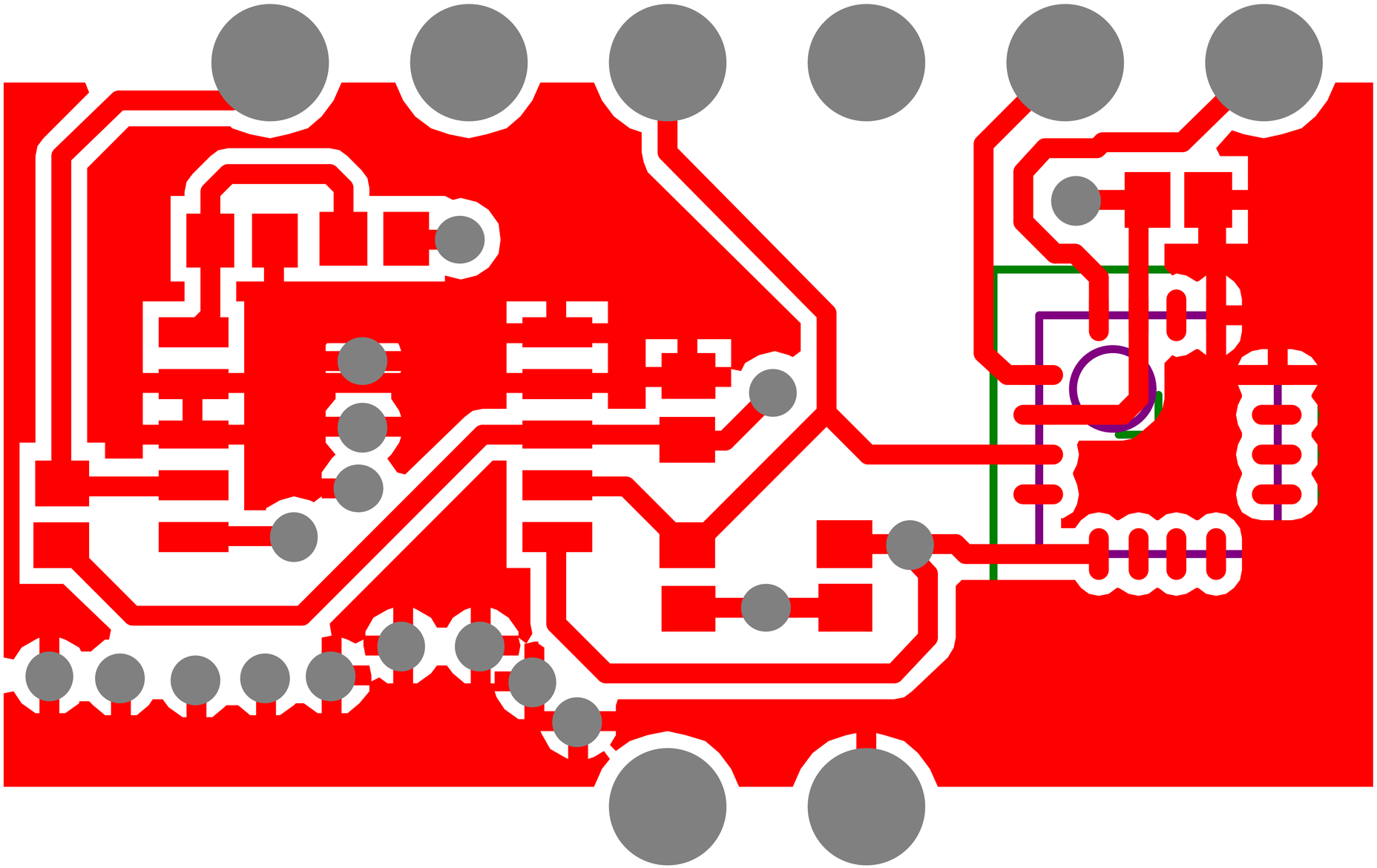

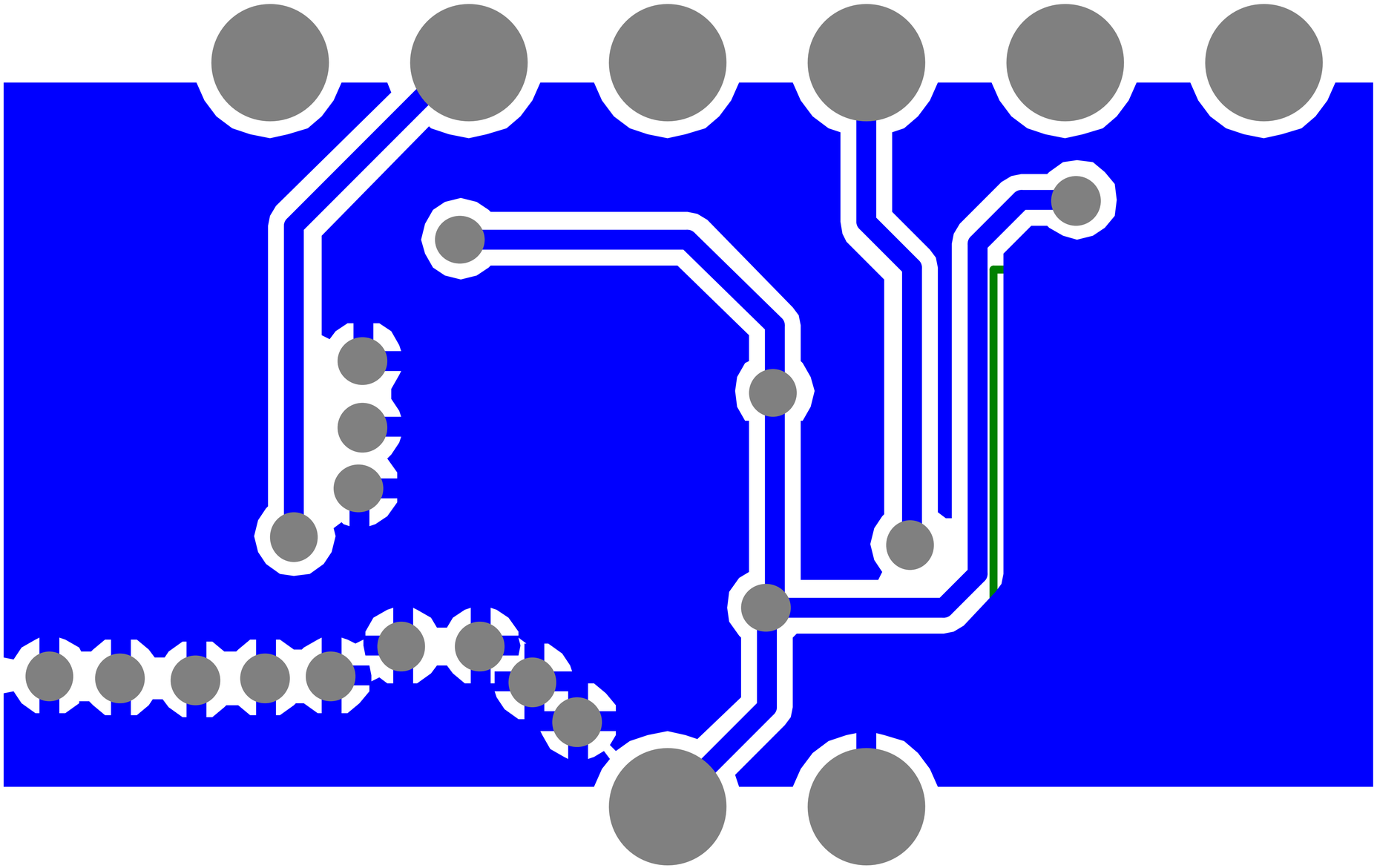

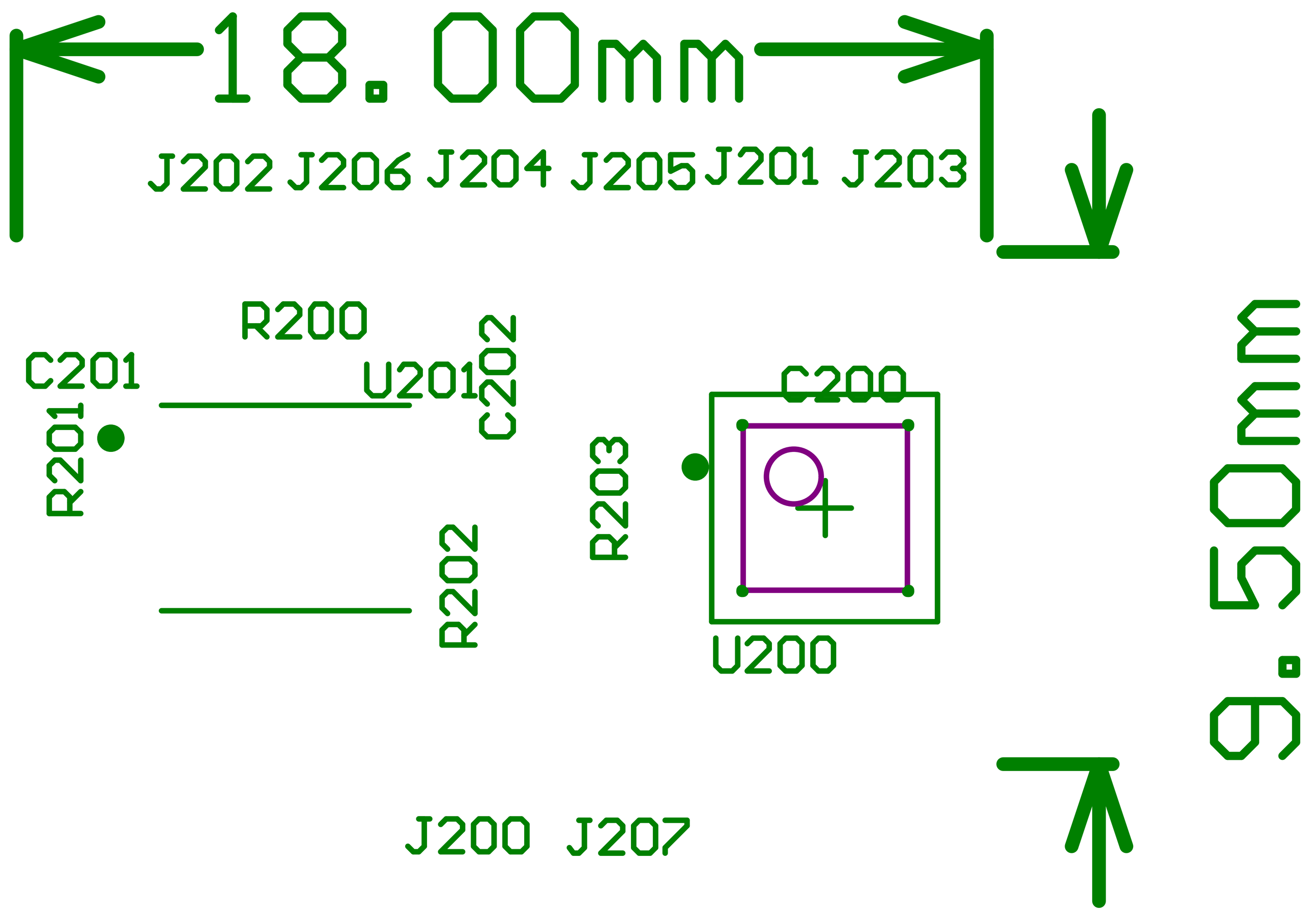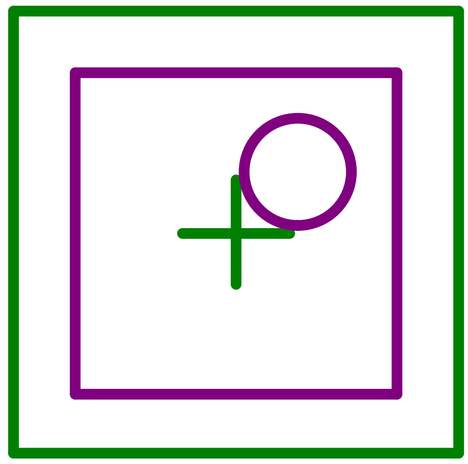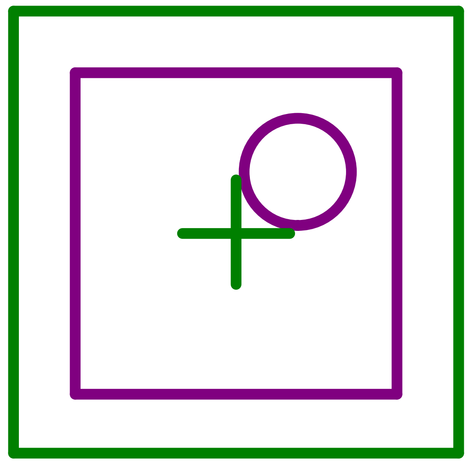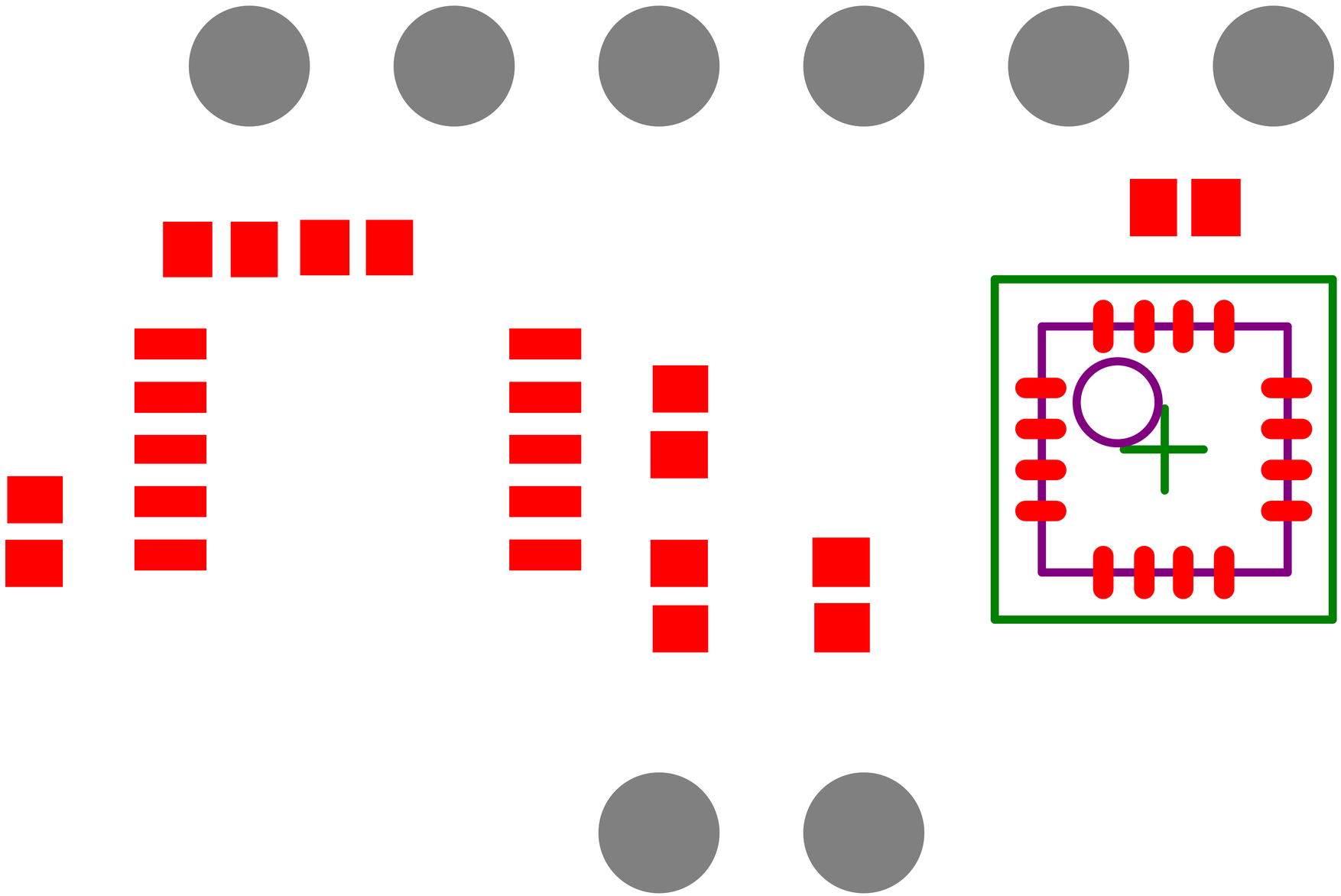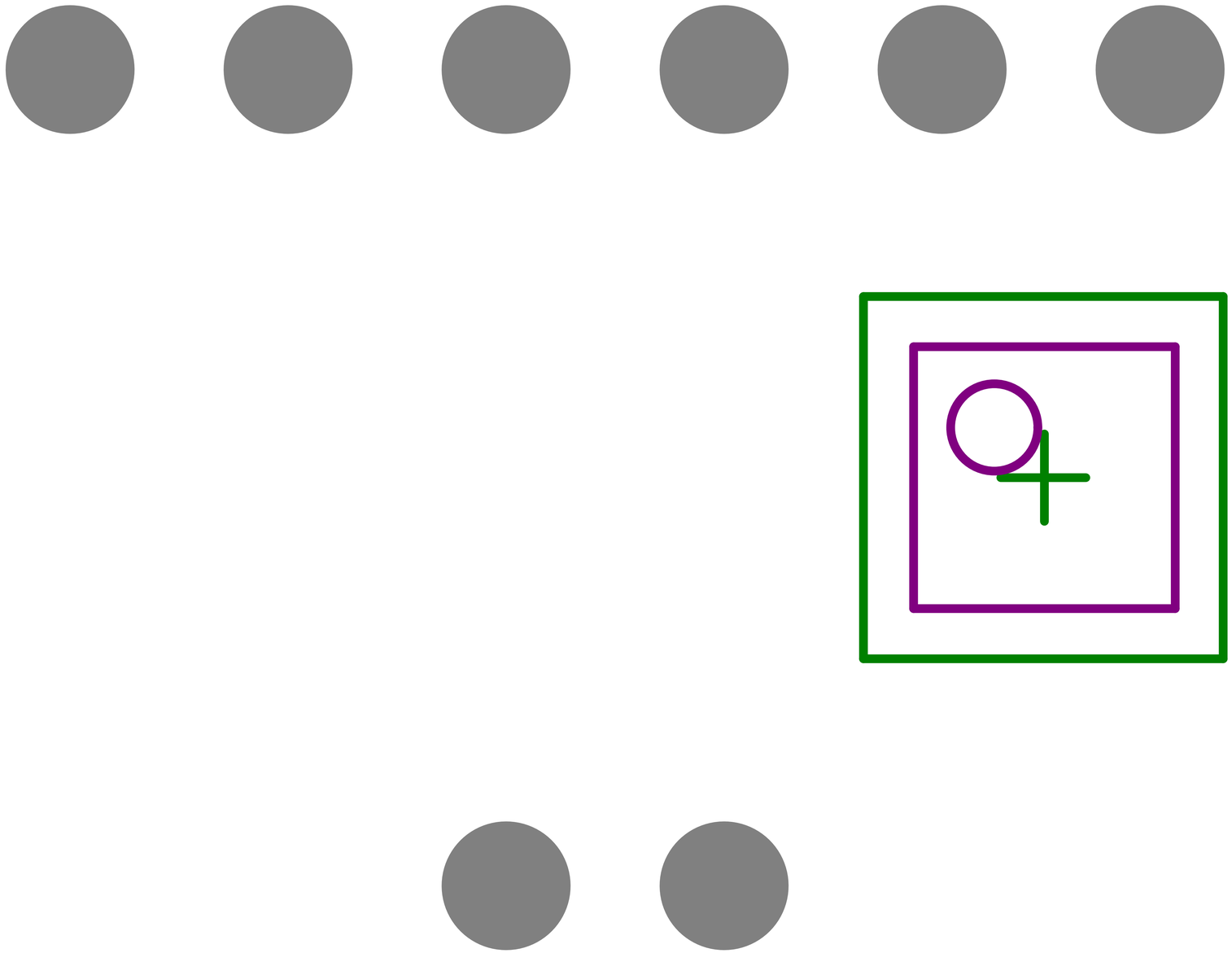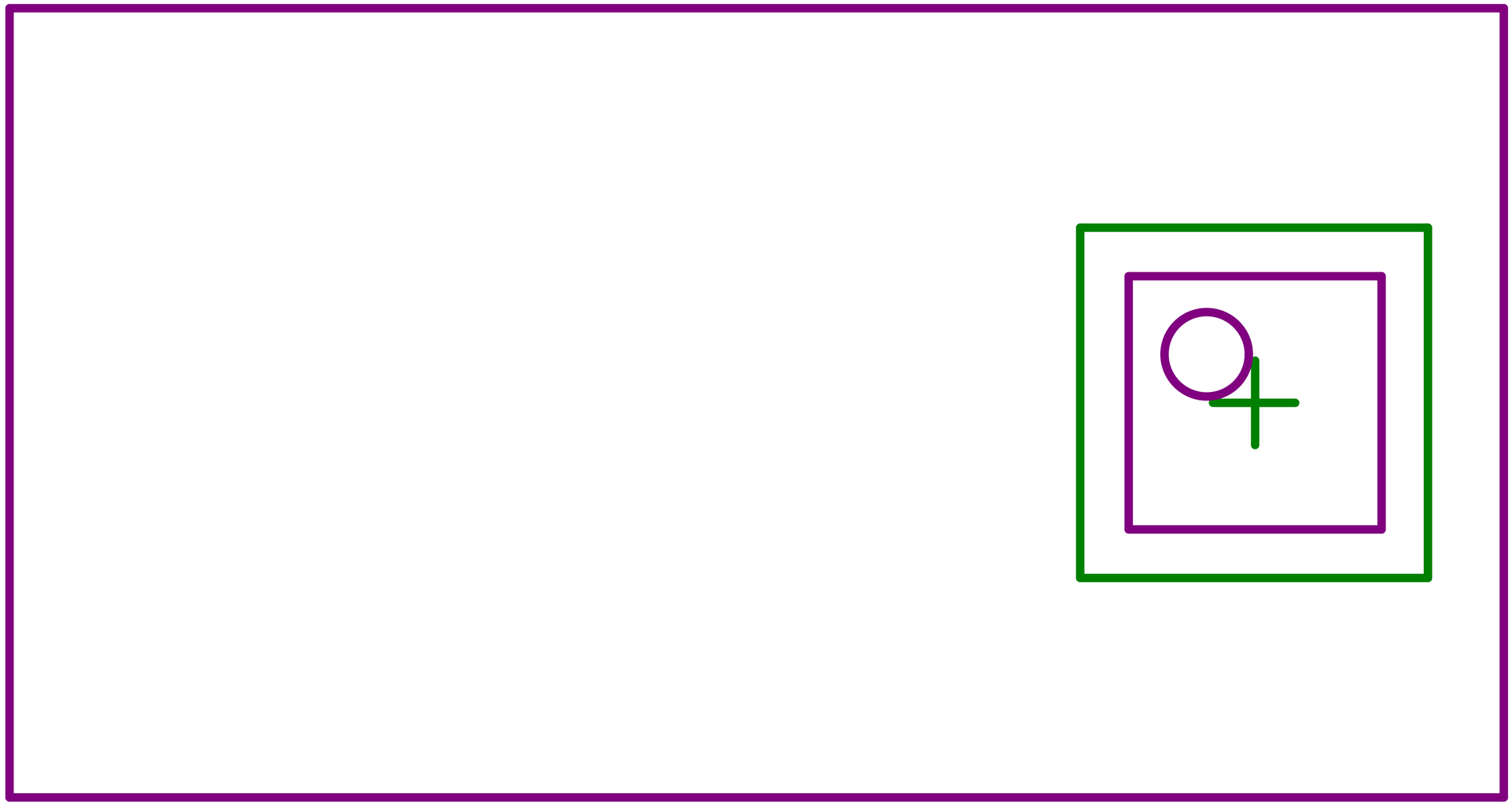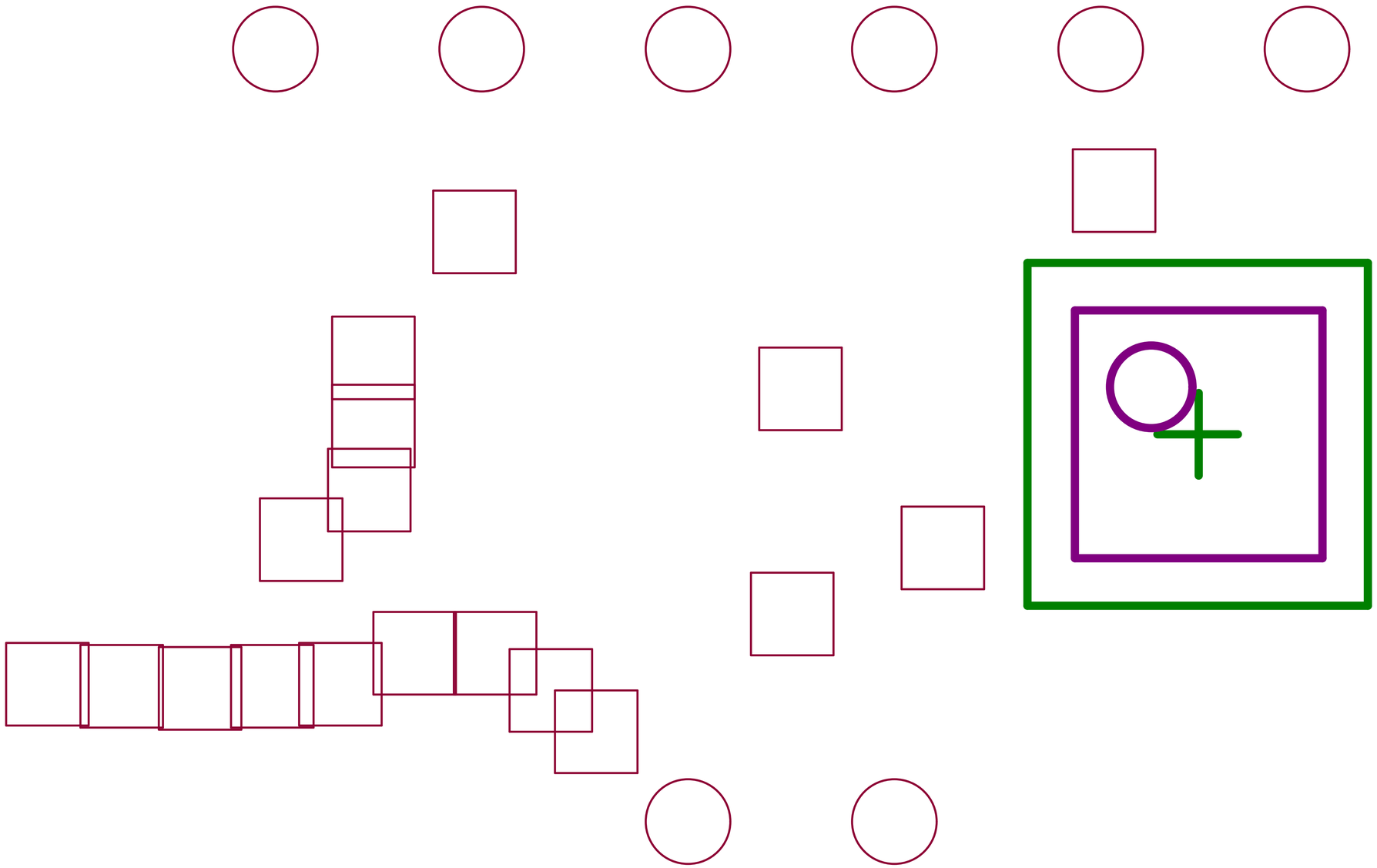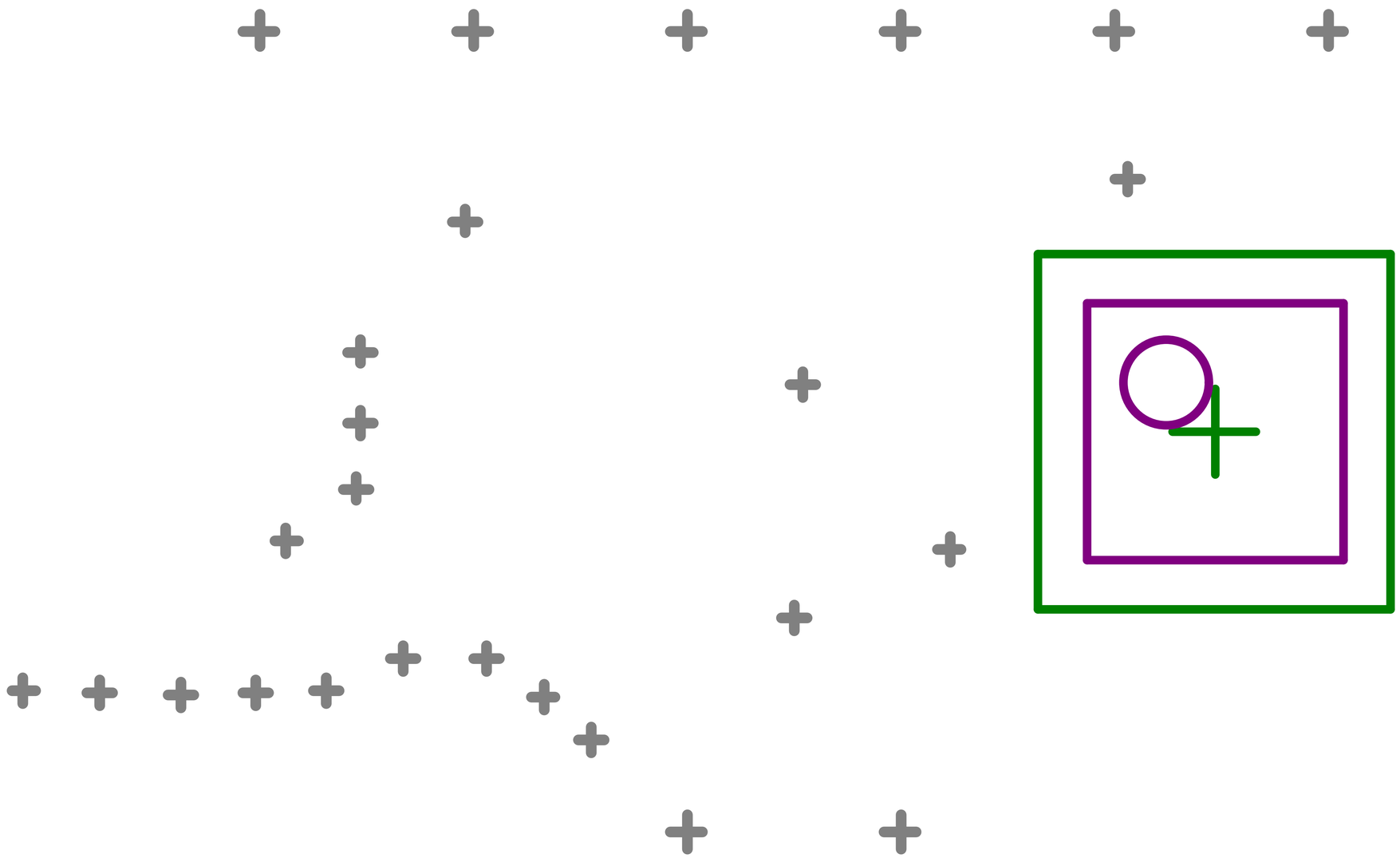
18.00mm
J202 J206 J204 J205 J201 J203
R200
C201
U201
C202
R201
R203
C200
R202
U200
9.50mm
J200 J207