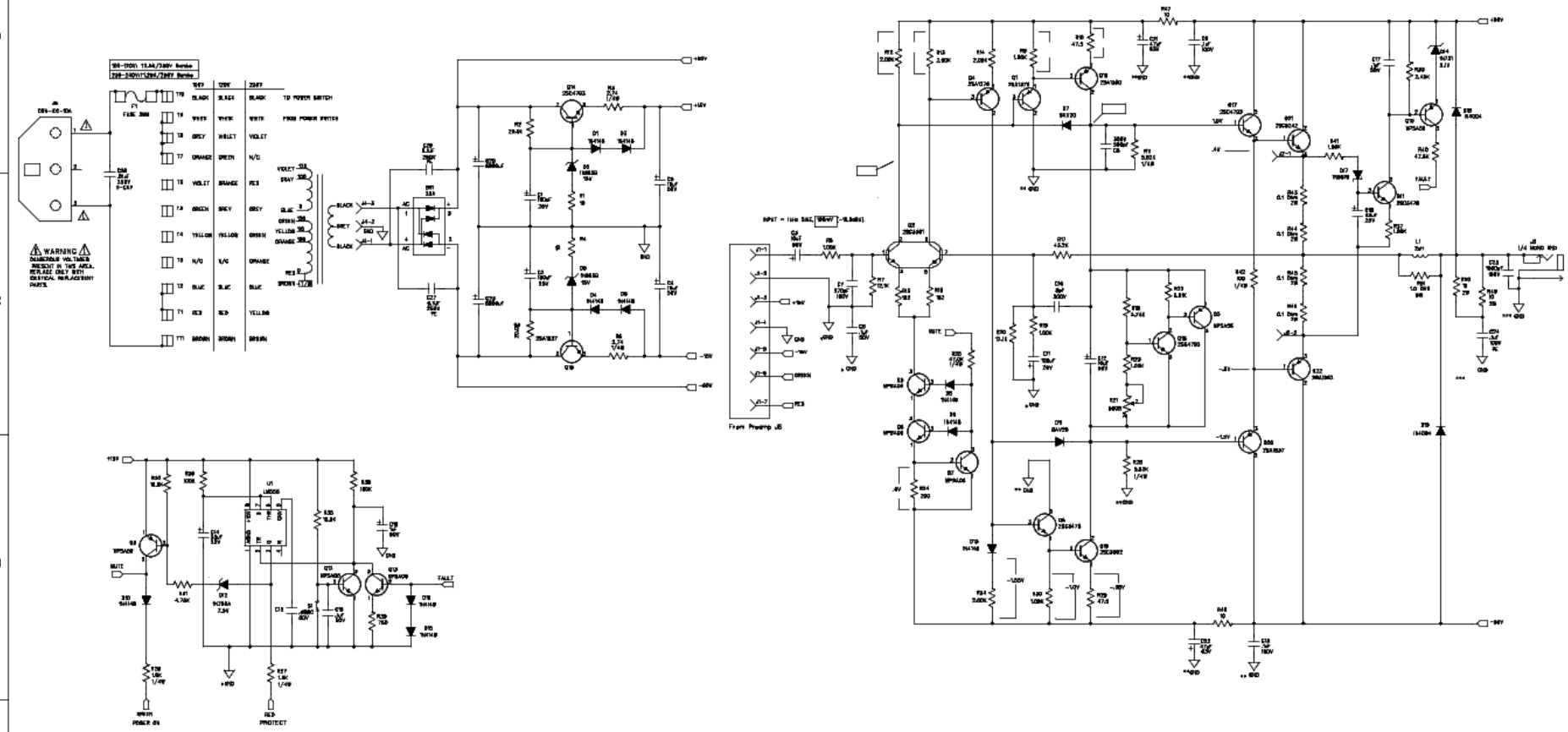

NOTES: UNLESS OTHERWISE SPECIFIED,

1. TEST CONDITIONS: 100mV 1kHz SINE, DIRECT INPUT (PRE-AMP BYPASSED) NO LOAD
2. [ ] DENOTES RMS AC VOLTAGE

BIAS ADJUSTMENT PROCEDURE:
WITH POWER OFF, ADJUST POT R21 TO FULL COUNTER-CLOCKWISE POSITION.
TURN ON POWER AND WAIT 5 SECONDS FOR TURN ON DELAY.
TURN R21 CLOCKWISE UNTIL VOLTAGE ACCROSS P3 READS 5 mVDC.

NOT VALID UNLESS STAMP IS RED

gallien technology

2340 PARASOL DRIVE
SAN JOSE CA 95121
VOICE: 408-441-8081
FAX: 408-441-8086

1. Fuse spec changed to 12.5A/250V Series

APPROVALS		DATE
DRAWN	R.A.G.	12/5/00
DESIGN	R.A.G.	3/04/02
CLEN		
MECH		
Q/A		
RELEASER		

TITLE: BACKLINE 250 POWER AMP

SIZE	DRAWING NO:	REV.
B	406-0108-A	A
	PART NO: 206-0108-A	

COMPANY: GALLIEN-KRUEGER

FILENAME: 60108A