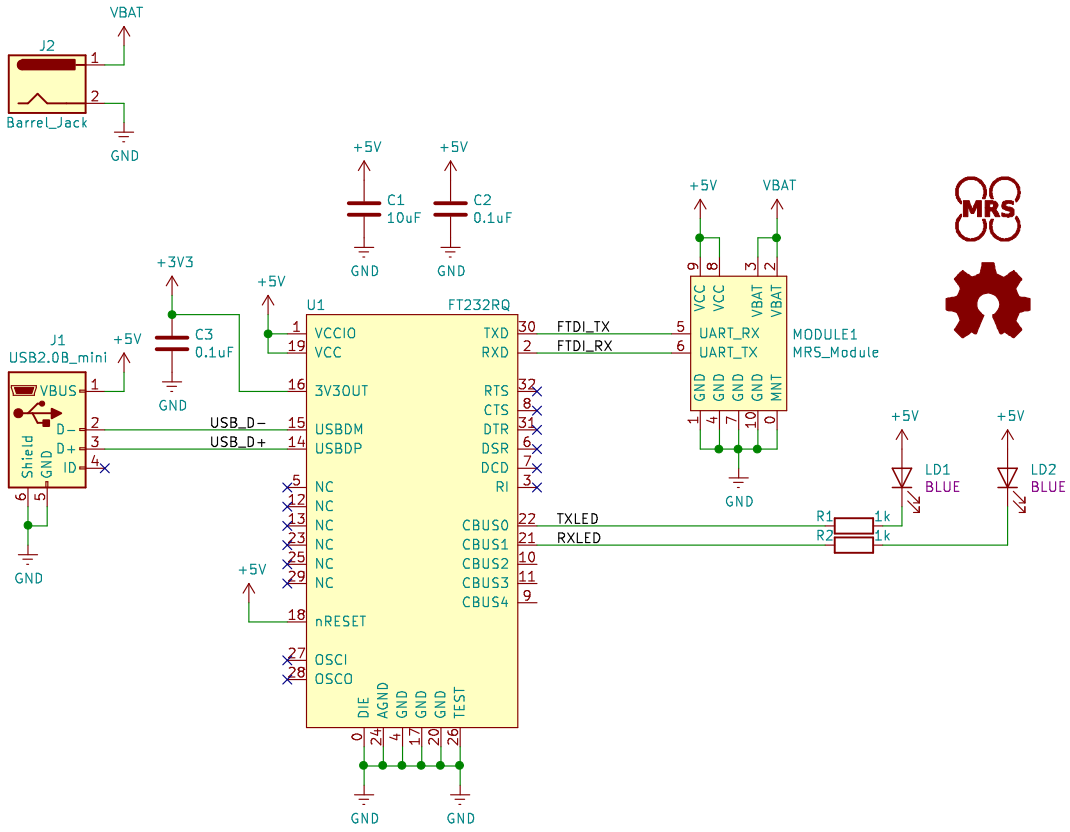

FACULTY OF ELECTRICAL ENGINEERING CTU IN PRAGUE

MULTI-ROBOT SYSTEMS GROUP

Sheet: /
File: MRS_Module_Host.sch

Title: MRS Module Host

Size: A4	Date: 2020-12-15	Rev: 1
KiCad E.D.A. kicad 5.1.7-a382d34a887ubuntu20.04.1		Id: 1/1