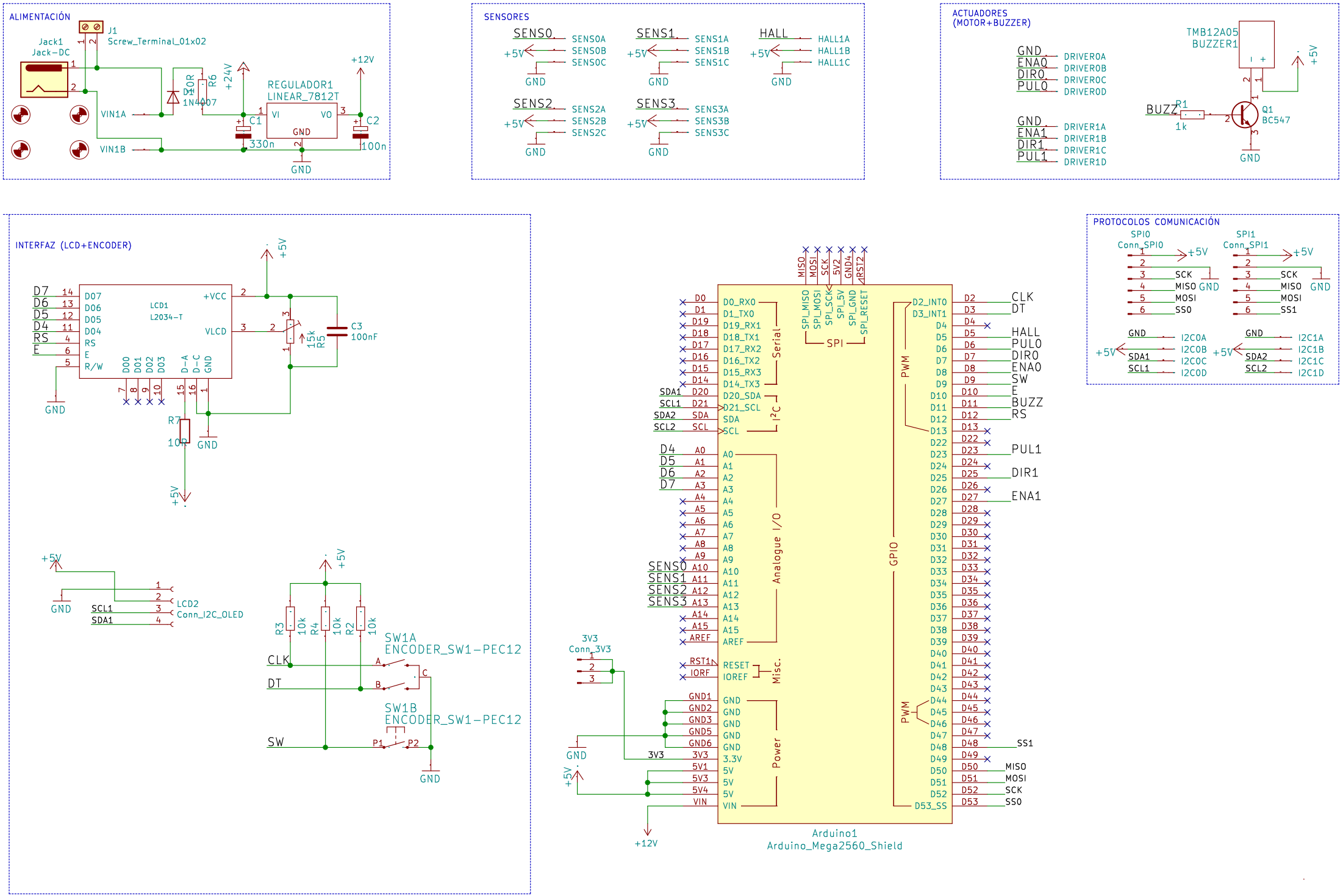
ALIMENTACIÓN
J1
Screw_Terminal_01x02
Jack1
Jack-DC
D1
1N4007
R6
10R
+24V
REGULADOR1
LINEAR_7812T
VI
VO
GND
C1
330n
C2
100n
+12V
VIN1A
VIN1B
SENSORES
SENS0
SENS0A
SENS0B
SENS0C
SENS1
SENS1A
SENS1B
SENS1C
HALL
HALL1A
HALL1B
HALL1C
SENS2
SENS2A
SENS2B
SENS2C
SENS3
SENS3A
SENS3B
SENS3C
+5V
GND
ACTUADORES
(MOTOR+BUZZER)
GND
ENA0
DIR0
PUL0
DRIVER0A
DRIVER0B
DRIVER0C
DRIVER0D
ENA1
DIR1
PUL1
DRIVER1A
DRIVER1B
DRIVER1C
DRIVER1D
TMB12A05
BUZZER1
BUZZ
R1
1k
Q1
BC547
INTERFAZ (LCD+ENCODER)
LCD1
L2034-T
D07
D06
D05
D04
RS
E
R/W
D00
D01
D02
D03
D-A
D-C
GND
+VCC
VLCD
D7
D6
D5
D4
RS
E
C3
100nF
15k
R5
R7
10R
LCD2
Conn_I2C_OLED
SCL1
SDA1
R3
10k
R4
10k
R2
10k
SW1A
ENCODER_SW1-PEC12
SW1B
ENCODER_SW1-PEC12
CLK
DT
SW
PROTOCOLOS COMUNICACIÓN
SPI0
Conn_SPI0
SPI1
Conn_SPI1
SCK
MISO
MOSI
SS0
SS1
I2C0A
I2C0B
I2C0C
I2C0D
I2C1A
I2C1B
I2C1C
I2C1D
Arduino1
Arduino_Mega2560_Shield
Serial
I2C
Analogue I/O
Misc.
Power
SPI
PWM
GPIO
D0_RX0
D1_TX0
D19_RX1
D18_TX1
D17_RX2
D16_TX2
D15_RX3
D14_TX3
D20_SDA
D21_SCL
SDA
SCL
A0
A1
A2
A3
A4
A5
A6
A7
A8
A9
A10
A11
A12
A13
A14
A15
AREF
RESET
IOREF
GND
3.3V
5V
VIN
D2_INT0
D3_INT1
D53_SS
3V3
Conn_3V3
+12V