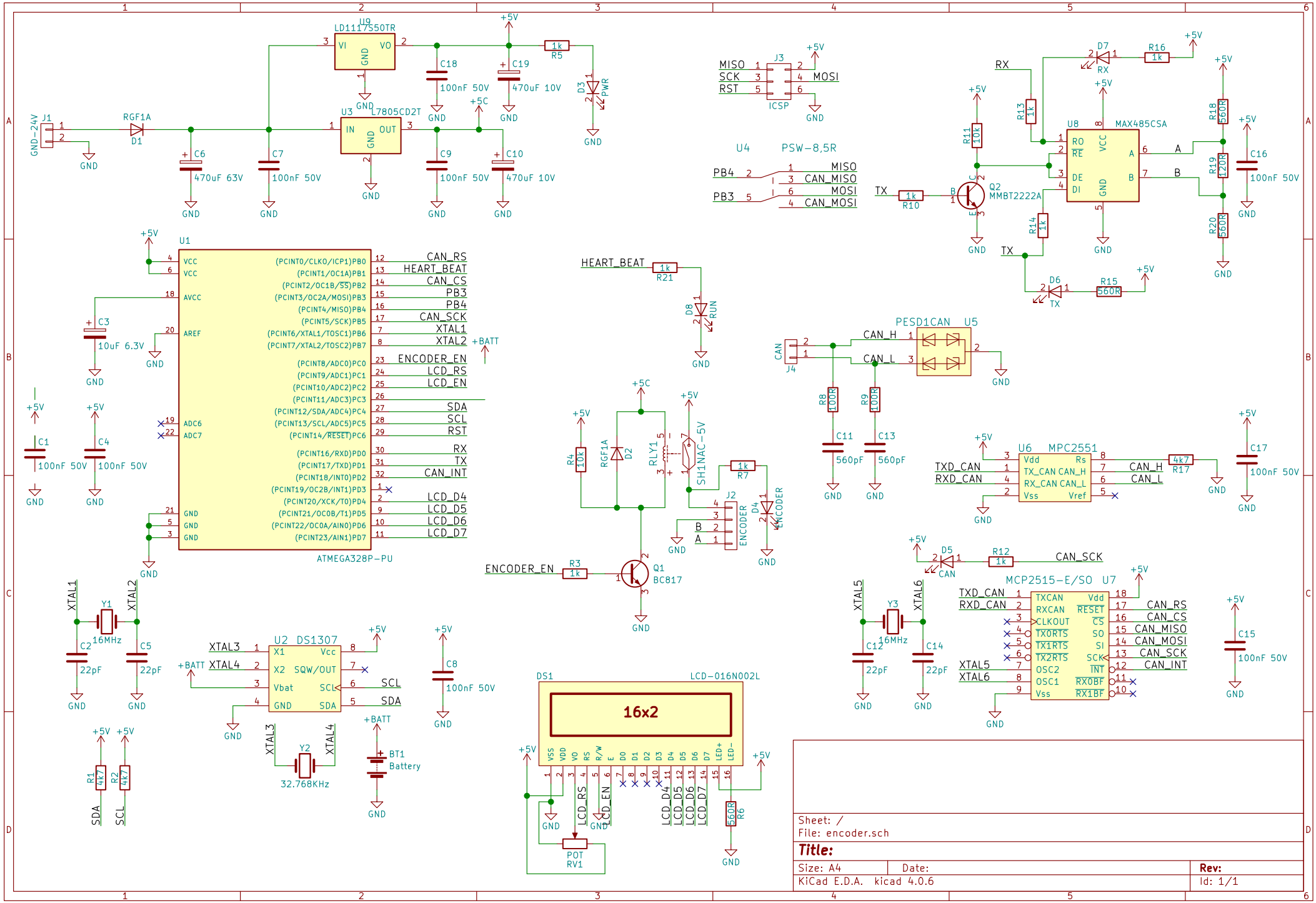
U9 LD1117S50TR
U3 L7805CD2T
J1 GND-24V
RGF1A D1
C6 470uF 63V
C7 100nF 50V
C9 100nF 50V
C10 470uF 10V
C18 100nF 50V
C19 470uF 10V
R5 1k
D3 PWR
+5V
+5C
GND
J3 ICSP
MISO
SCK
RST
MOSI
U4 PSW-8,5R
PB4
PB3
CAN_MISO
CAN_MOSI
U8 MAX485CSA
RO
RE
DE
DI
VCC
GND
A
B
R10 1k
Q2 MMBT2222A
R11 10k
R13 1k
R14 1k
R16 1k
D7 RX
D6 TX
R15 560R
R18 560R
R19 120R
R20 560R
C16 100nF 50V
U1 ATMEGA328P-PU
VCC
AVCC
AREF
ADC6
ADC7
(PCINT0/CLKO/ICP1)PB0
(PCINT1/OC1A)PB1
(PCINT2/OC1B/SS)PB2
(PCINT3/OC2A/MOSI)PB3
(PCINT4/MISO)PB4
(PCINT5/SCK)PB5
(PCINT6/XTAL1/TOSC1)PB6
(PCINT7/XTAL2/TOSC2)PB7
(PCINT8/ADC0)PC0
(PCINT9/ADC1)PC1
(PCINT10/ADC2)PC2
(PCINT11/ADC3)PC3
(PCINT12/SDA/ADC4)PC4
(PCINT13/SCL/ADC5)PC5
(PCINT14/RESET)PC6
(PCINT16/RXD)PD0
(PCINT17/TXD)PD1
(PCINT18/INT0)PD2
(PCINT19/OC2B/INT1)PD3
(PCINT20/XCK/T0)PD4
(PCINT21/OC0B/T1)PD5
(PCINT22/OC0A/AIN0)PD6
(PCINT23/AIN1)PD7
CAN_RS
HEART_BEAT
CAN_CS
PB3
PB4
CAN_SCK
XTAL1
XTAL2
ENCODER_EN
LCD_RS
LCD_EN
SDA
SCL
RST
RX
TX
CAN_INT
LCD_D4
LCD_D5
LCD_D6
LCD_D7
+BATT
C3 10uF 6.3V
C1 100nF 50V
C4 100nF 50V
HEART_BEAT
R21 1k
D8 RUN
R4 10k
RGF1A D2
RLY1
SH1NAC-5V
R7 1k
J2 ENCODER
D4 ENCODER
ENCODER_EN
R3 1k
Q1 BC817
J4 CAN
CAN_H
CAN_L
PESD1CAN U5
R8 100R
R9 100R
C11 560pF
C13 560pF
U6 MPC2551
Vdd
TX_CAN
RX_CAN
Vss
Rs
CAN_H
CAN_L
Vref
TXD_CAN
RXD_CAN
R17 4k7
C17 100nF 50V
D5 CAN
R12 1k
CAN_SCK
MCP2515-E/SO U7
TXCAN
RXCAN
CLKOUT
TX0RTS
TX1RTS
TX2RTS
OSC2
OSC1
Vss
Vdd
RESET
CS
SO
SI
SCK
INT
RX0BF
RX1BF
CAN_RS
CAN_CS
CAN_MISO
CAN_MOSI
CAN_SCK
CAN_INT
XTAL5
XTAL6
Y3 16MHz
C12 22pF
C14 22pF
C15 100nF 50V
Y1 16MHz
C2 22pF
C5 22pF
U2 DS1307
X1
X2
Vbat
GND
Vcc
SQW/OUT
SCL
SDA
XTAL3
XTAL4
C8 100nF 50V
Y2 32.768KHz
BT1 Battery
R1 4k7
R2 4k7
DS1 LCD-016N002L
16x2
VSS
VDD
VO
RS
R/W
E
D0
D1
D2
D3
D4
D5
D6
D7
LED+
LED-
LCD_RS
LCD_EN
LCD_D4
LCD_D5
LCD_D6
LCD_D7
POT RV1
R6 560R
Sheet: /
File: encoder.sch
Title:
Size: A4
Date:
Rev:
KiCad E.D.A. kicad 4.0.6
Id: 1/1