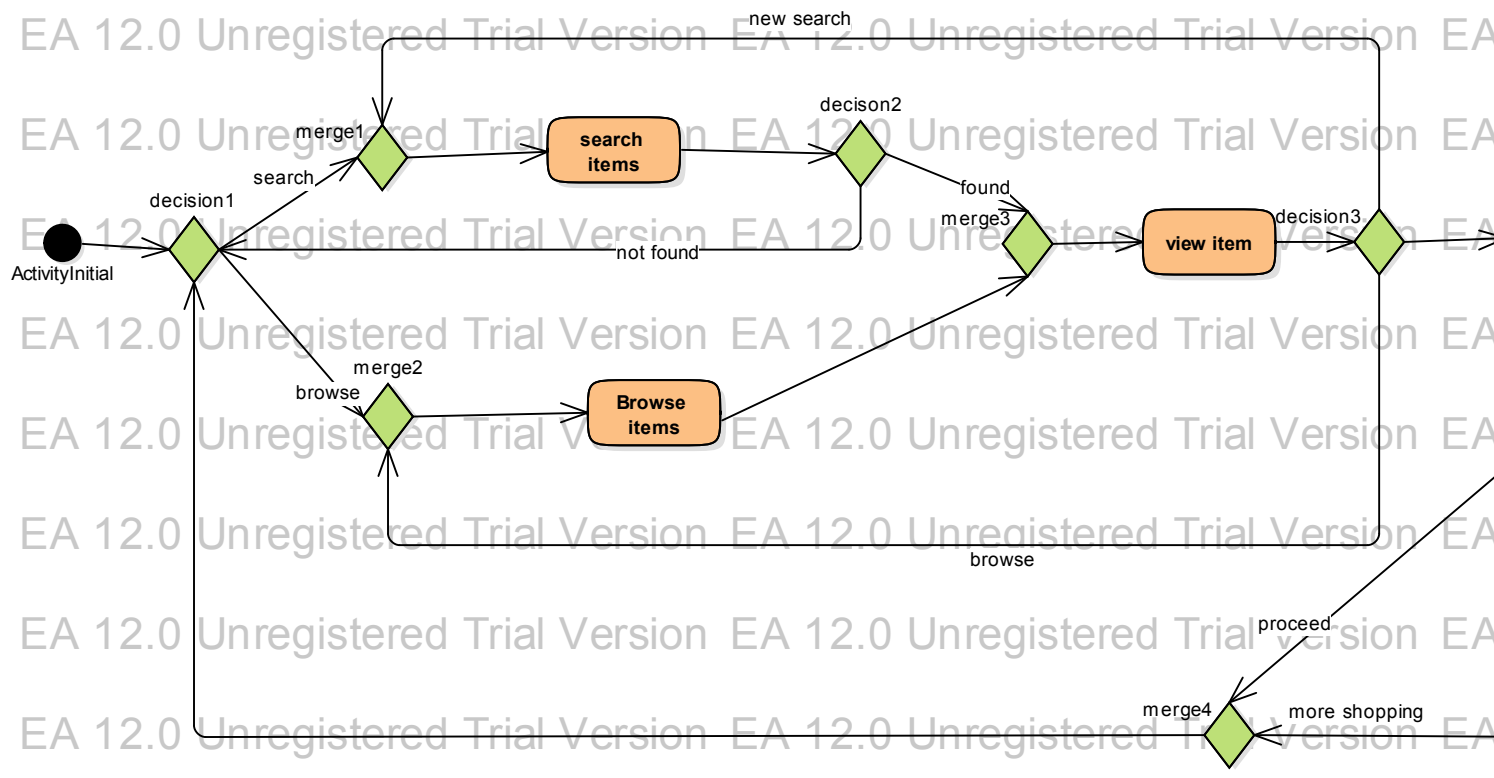

EA 12.0 Unregistered Trial Version

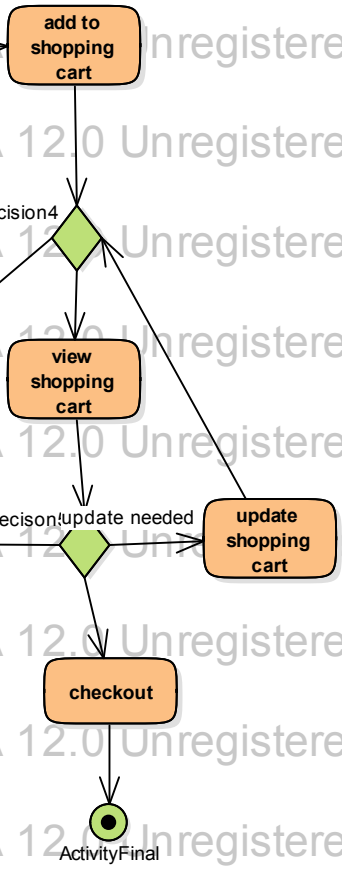

EA 12.0 Unregistered Trial Version