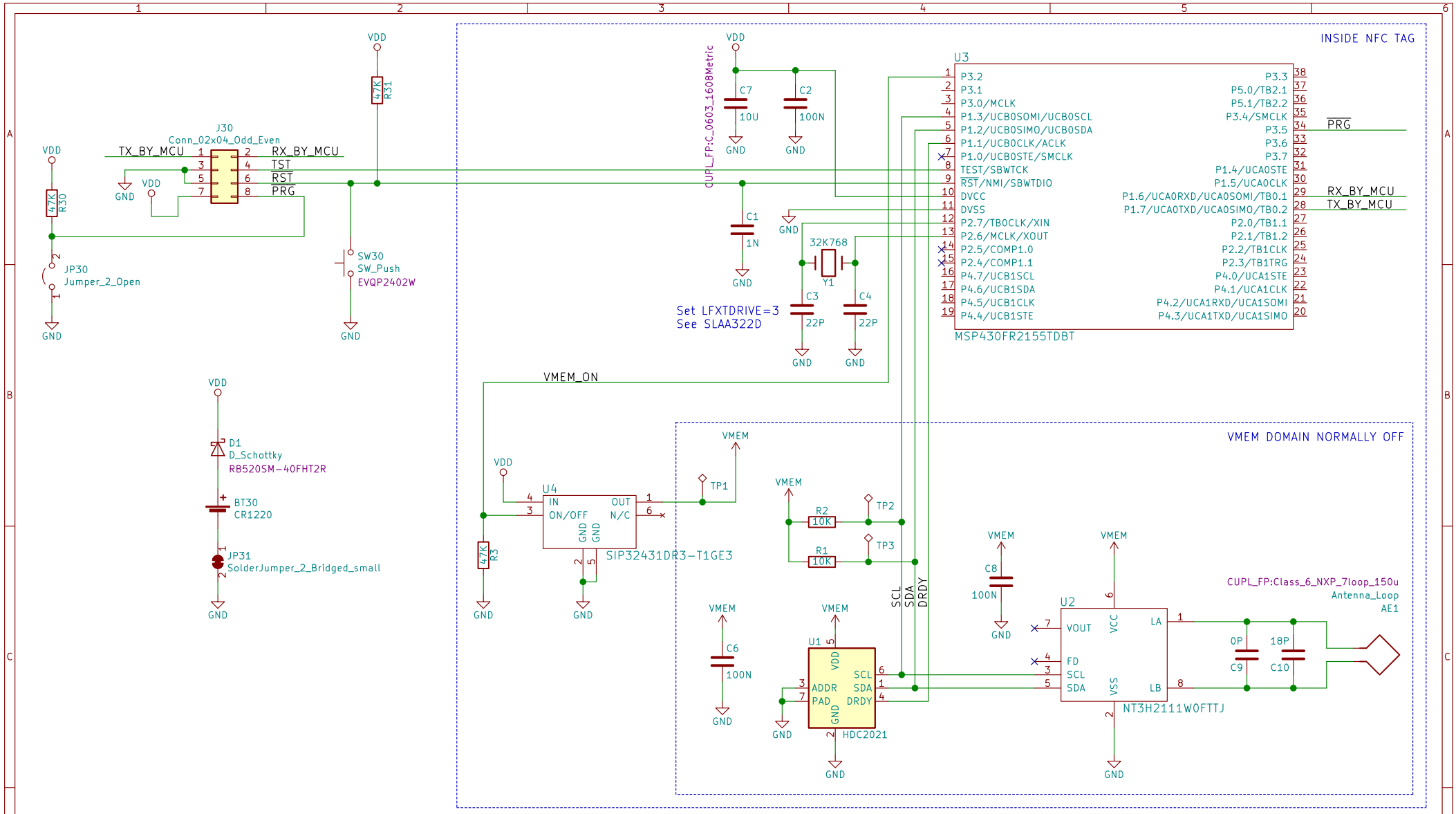

cupl

CUPL®

Licenced under CERN OHL-v2-S

Designed by Malcolm Mackay

COPYRIGHT Plotsensor Ltd. 2021

Sheet: /

File: HT07.sch

Title: CUPL TAG

Size: A4	Date: 2021-04-19	**Rev: 2**
KiCad E.D.A. kicad (5.1.5)-3		Id: 1/1