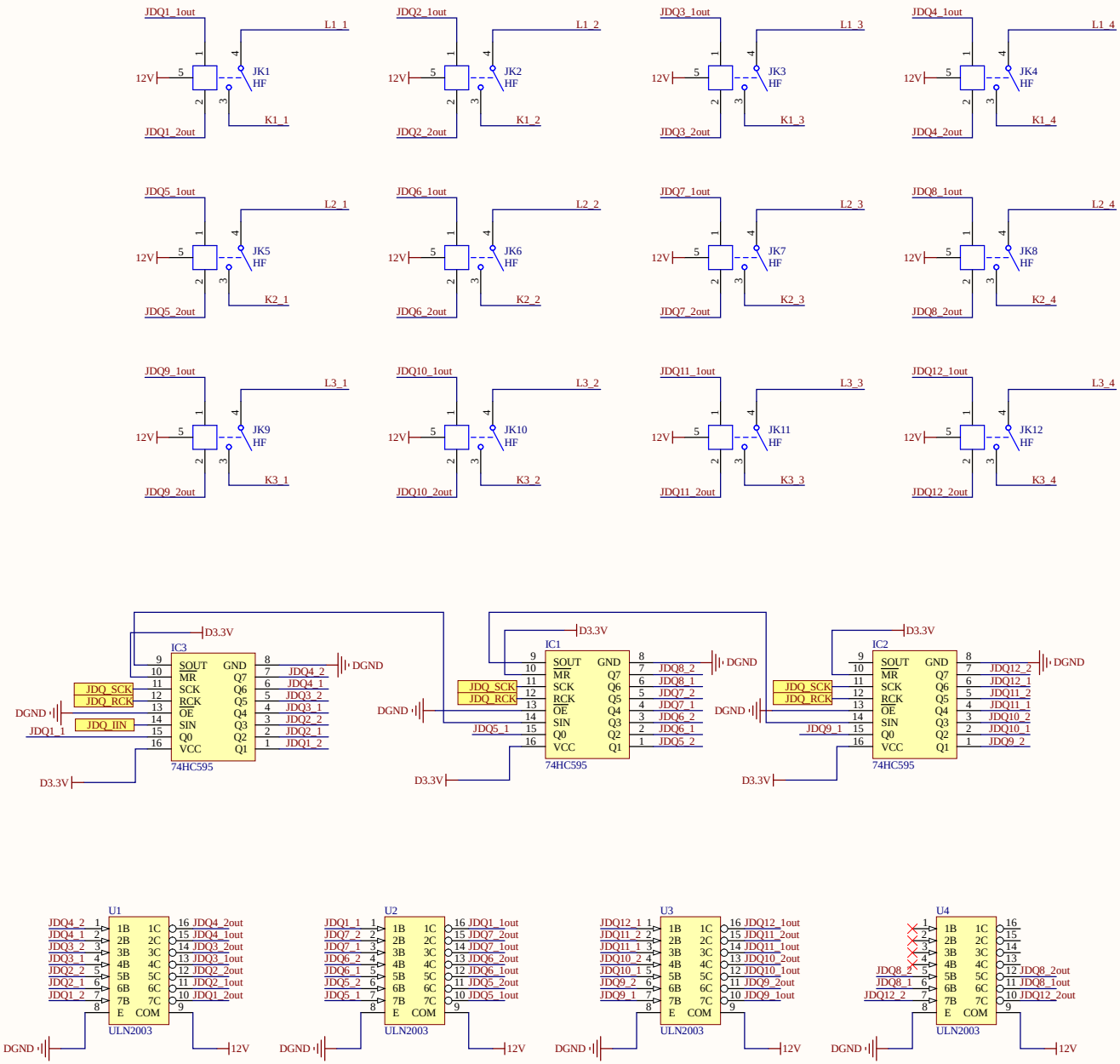

Title		
Size A3	Number	Revision
Date: 3/31/2024	Sheet of	
File: D:\1cad431LabFiles\..\JDQV1.1.SchDoc	Drawn By:	

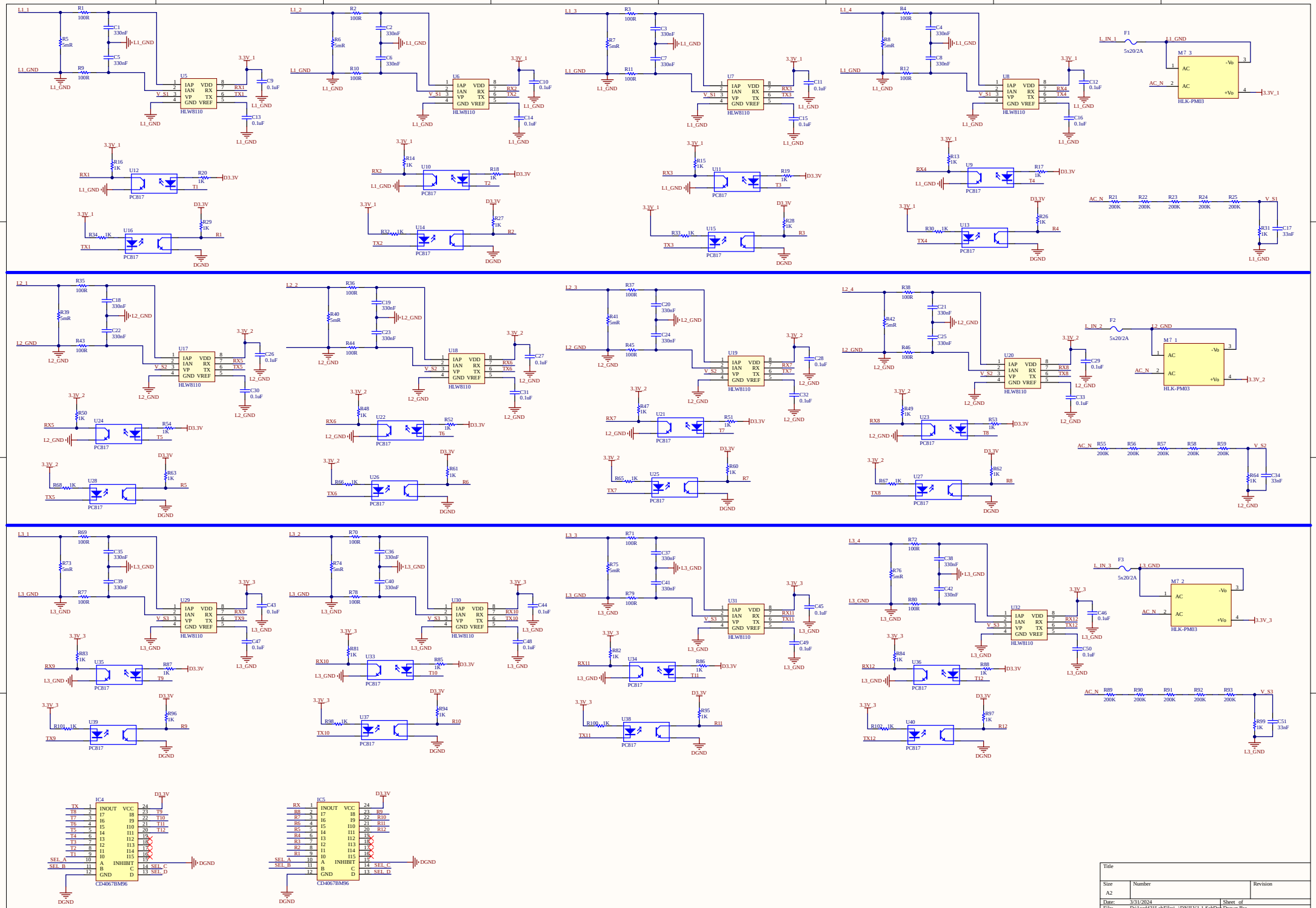
L1_1
L1_2
L1_3
L1_4
L1_GND
L2_1
L2_2
L2_3
L2_4
L2_GND
L3_1
L3_2
L3_3
L3_4
L3_GND
L_IN_1
L_IN_2
L_IN_3
F1
F2
F3
5x20/2A
M? 1
M? 2
M? 3
HLK-PM03
AC_N
V_S1
V_S2
V_S3
3.3V_1
3.3V_2
3.3V_3
D3.3V
DGND
HLW8110
PC817
CD4067BM96
IC4
IC5
Title
Size
A2
Number
Revision
Date: 3/31/2024
Sheet of
File: D:\Icad431LabFiles\..\DNJLV1.1.SchDoc
Drawn By:

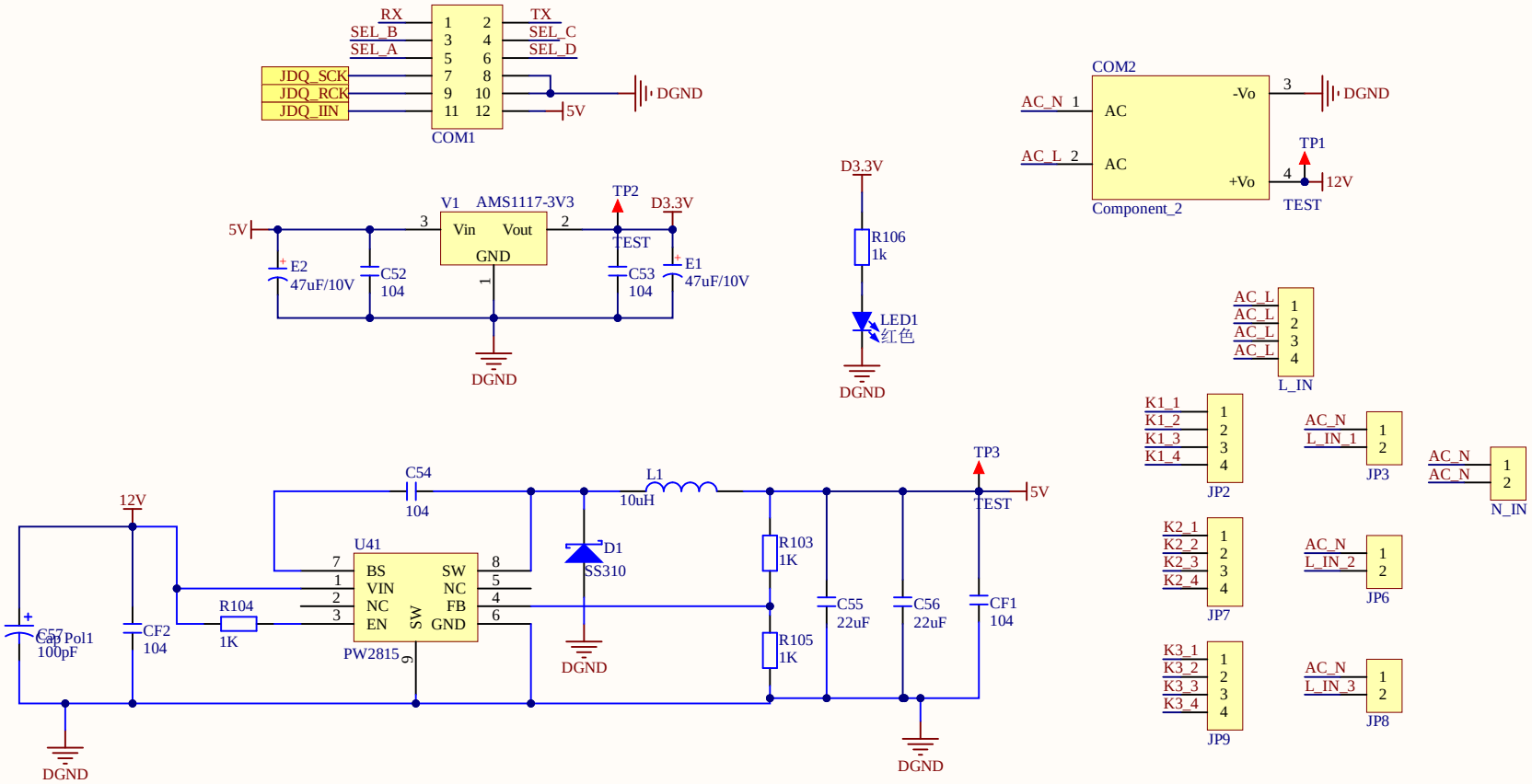

Title		
Size A4	Number	Revision
Date: 3/31/2024	Sheet of	
File: D:\1cad431LabFiles\..\connectV1.1.SchDoc	Drawn By:	