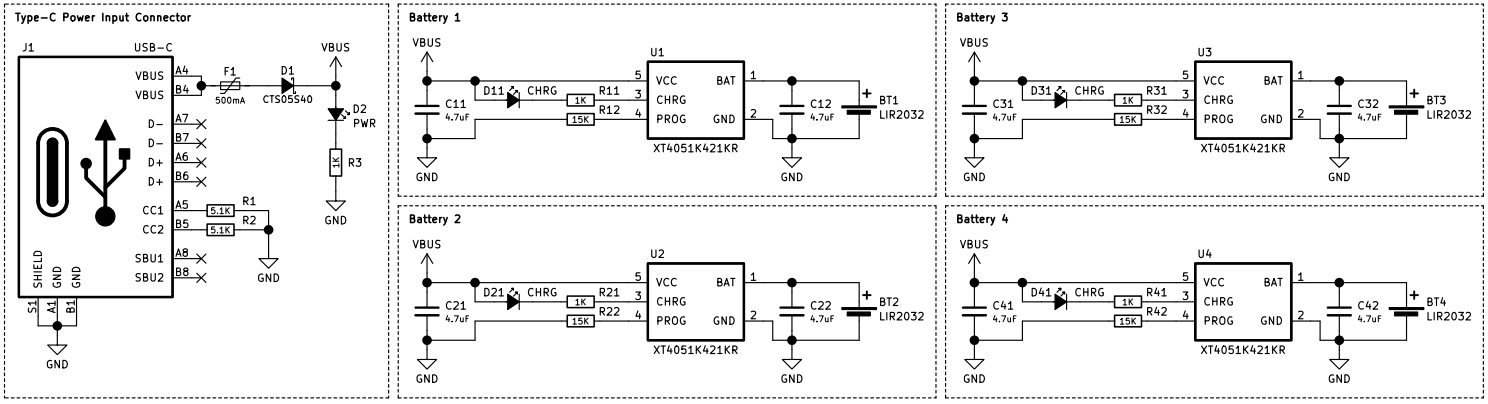

LIR2032 Li-Ion Battery Charger

Curious Minds Development | Hojadurdy Durdygylyjov

Charger for 4xLIR2032 Battery.

Date: 2019-11-18	**Rev: 1**	**File: Rev.1.sch**	**KiCad E.D.A**
Sheet: 1/1	**License: MIT License**		