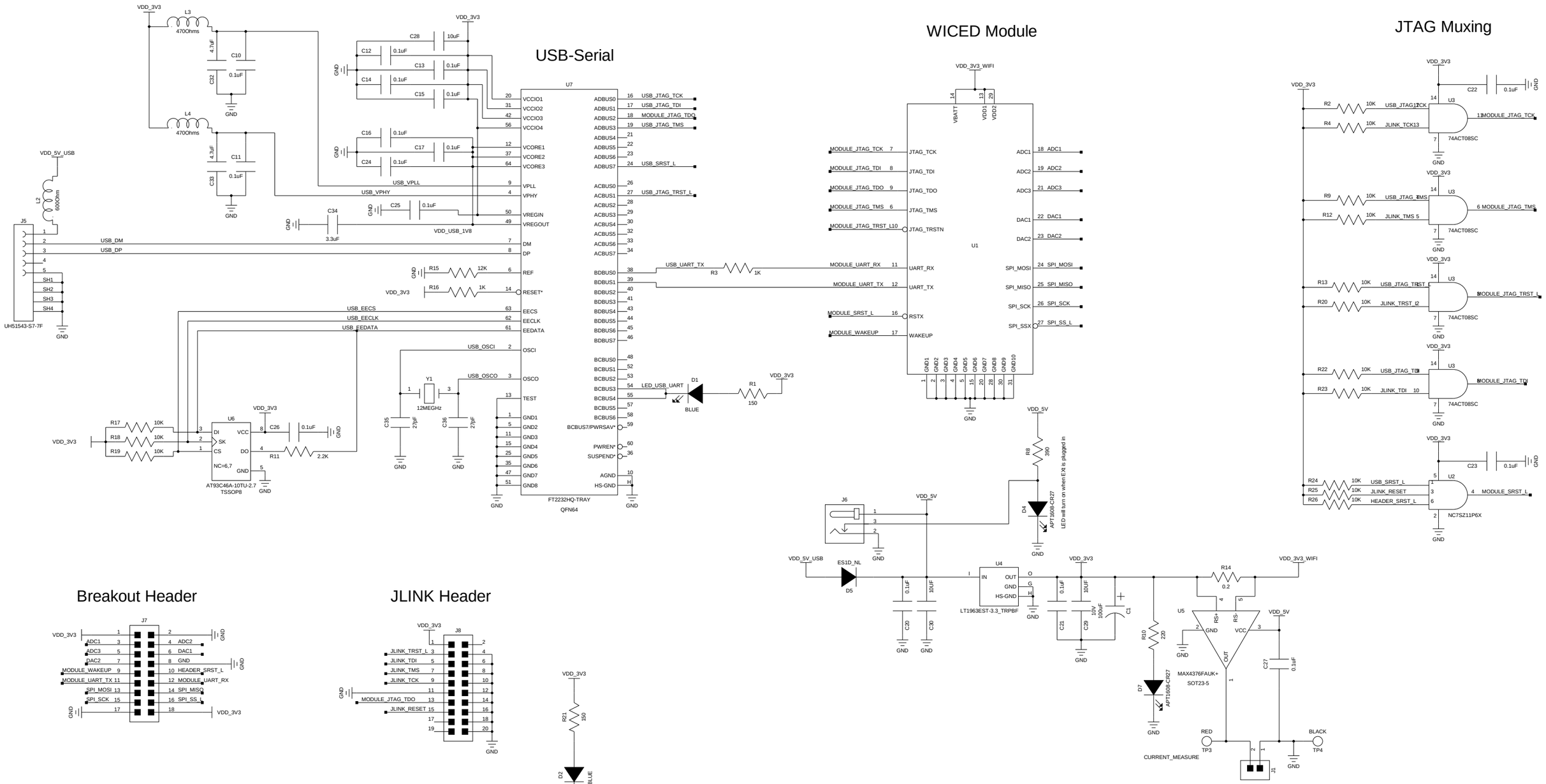

DOC1
DOCUMENT
824-120515-0000

PCB1
PRINTED CIRCUIT BOARD
200-120515-0030

Approvals	
Designer	Date
Reviewer	Date
Reviewer	Date
Reviewer	Date

Broadcom

Company Confidential

SIZE	TITLE	
B	BCM9WCD1EVAL1	
Designer: Chad O'Neill	Drawing Number: 824-120515-0000	Version: P300
DATE 09-08-2011_15:35	SHEET 1 OF 1	