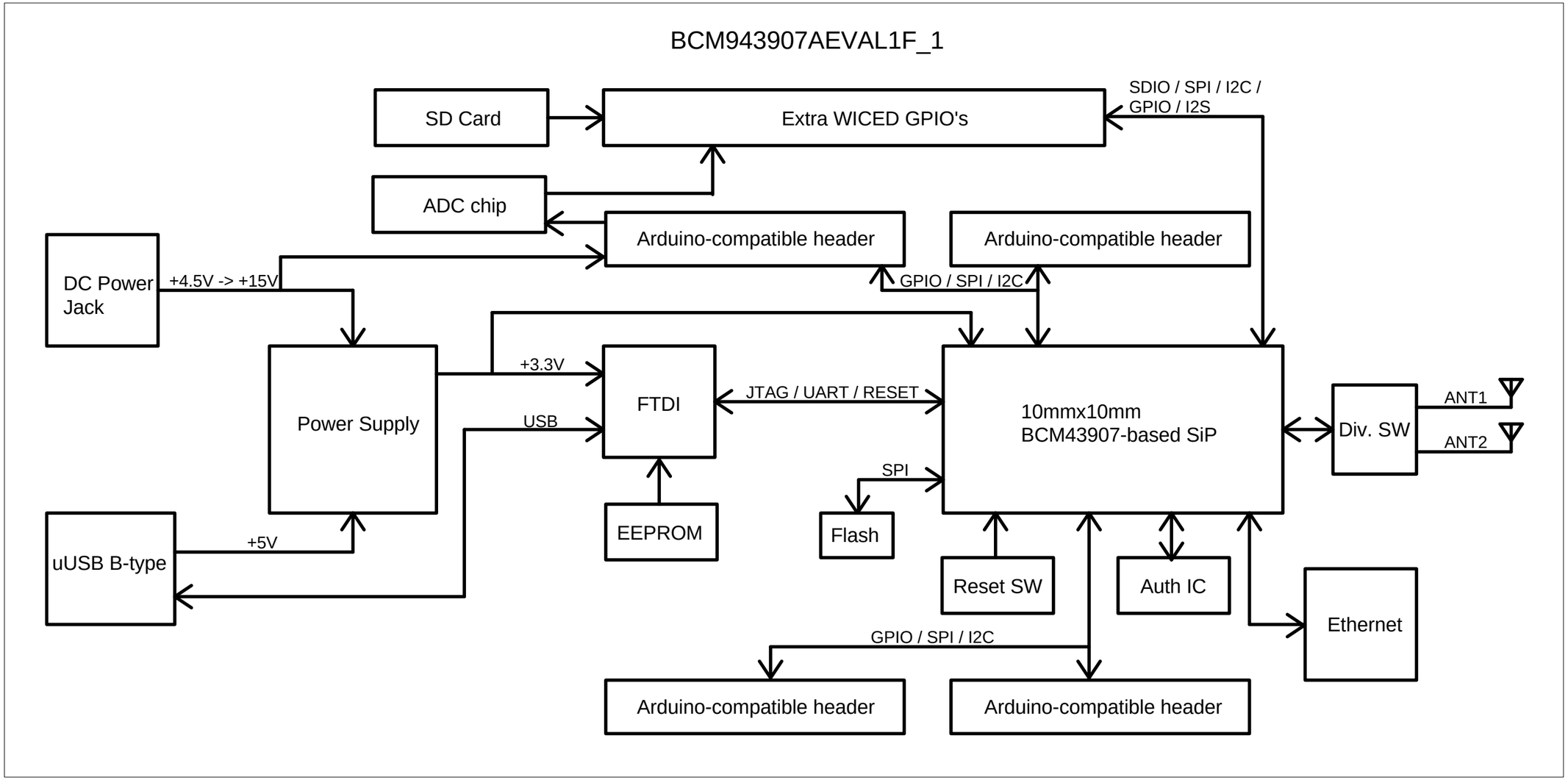

*** IINDEX ***

SHEET 1: SYSTEM BLOCK DIAGRAM
SHEET 2: WICED / ARDUINO HEADER PAIRS
SHEET 3: POWER
SHEET 4: PROGRAM / DEBUG INTERFACE, RESET
SHEET 5: BCM43907-based SiP (10mm x 10mm)
SHEET 6: BOOTSTRAPS, SFLASH
SHEET 7: RF
SHEET 8: RESET DELAY, AUTH IC, uSD
SHEET 9: ARDUINO HEADERS, WICED HEADER, ADC
SHEET 10: MII

DOCUMENT
SCHEMATIC DIAGRAM 824-129817-0010

PRINTED CIRCUIT BOARD
200-129817-0010

SYSTEM BLOCK DIAGRAM

Approvals		Broadcom			
Designer	Date	Company Confidential			
Reviewer	Date	SIZE B	TITLE BCM943907AEVAL1F_1		
Reviewer	Date	Designer LEX	Drawing Number 824-129817-0010	Version 03	
Reviewer	Date	DATE 16/10/2015:10:49	SHEET 1 OF 10		

BCM43907-based SiP Pin Name	WICED header net name
PWM_4	PWM_4
PWM_5	PWM_5
I2S0_MCK	I2S0_MCK
I2S0_SD_OUT	I2S0_SD_OUT
I2S0_SCK_BLCK	I2S0_SCK_BLCK
I2S0_WS_LRCLK	I2S0_WS_LRCLK
NC	NC
GND	GND
SPI_1_CLK	SPI_1_CLK
I2S1_SD_OUT	I2S1_SD_OUT
SPI_1_MISO	SPI_1_MISO
SPI_0_CLK	SPI_0_CLK
SPI_1_MOSI	SPI_1_MOSI
SPI_0_MOSI	SPI_0_MOSI
SPI_1_CS	SPI_1_CS
SPI_0_CS	SPI_0_CS
SPI_0_MISO	SPI_0_MISO
UART0_RXD_IN	UART0_RXD_IN
GND	GND
UART0_TXD_OUT	UART0_TXD_OUT
USB2_HOST_DEV_SEL	USB2_HOST_DEV_SEL
UART0_CTS_IN	UART0_CTS_IN
I2C_0_SCL	I2C_0_SCL
UART0_RTS_OUT	UART0_RTS_OUT
I2C_0_SDA	I2C_0_SDA
I2S1_MCK	I2S1_MCK
I2S1_WS_LRCLK	I2S1_WS_LRCLK
GND	GND
I2S1_SCK_BCLK	I2S1_SCK_BCLK
SDIO_DATA1	SDIO_DATA_1
SDIO_DATA0	SDIO_DATA_0
SDIO_CLK	SDIO_CLK
SDIO_CMD	SDIO_CMD
SDIO_DATA3	SDIO_DATA_3
SDIO_DATA2	SDIO_DATA_2
RF_SW_CTRL_6_UART1_RX_IN	RF_SW_CTRL_6_UART1_RXD
RF_SW_CTRL_7_RSRC_INIT_MODE_UART1_TX_OUT	UART1_TXD
RF_SW_CTRL_8_UART2_RX	RF_SW_CTRL_8_UART2_RXD
RF_SW_CTRL_9_HIB_LPO_SEL_UART2_TX	UART2_TXD
HIB_WAKE	HIB_WAKE
HIB_LPO_SEL	HIB_LPO_SEL
HIB_REG_ON_IN	HIB_REG_ON_IN
USB2_DN	USB2_DN
USB2_DP	USB2_DP

BCM43907-based SiP Pin Name	BCM43907-based SiP Pin Function	43907 bootstrap option	Arduino header net name	Arduino functions
GPIO_0	UART0_RX		ARD_GPIO0	UART_RX
GPIO_1_GSPI_MODE	UART0_TX	GSPI MODE	ARD_GPIO1	UART_TX
GPIO_13_SDIO_MODE	GPIO_13	SDIO MODE	ARD_GPIO2	GPIO
GPIO_7_WCPU_BOOT_MODE	PWM1	WLAN BOOT	ARD_GPIO3	PWM
GPIO_14	GPIO_14		ARD_GPIO4	GPIO
GPIO_16	PWM0		ARD_GPIO5	PWM
GPIO_15	PWM1		ARD_GPIO6	PWM
I2S0_SD_IN	GPIO_26		ARD_GPIO7	GPIO
N/A (uses external ADC chip)	ADC		ARD_AD0	AD0
N/A (uses external ADC chip)	ADC		ARD_AD1	AD1
N/A (uses external ADC chip)	ADC		ARD_AD2	AD2
N/A (uses external ADC chip)	ADC		ARD_AD3	AD3
I2C_1_SDA	I2C_SDA		ARD_AD4_SDA	AD4, SDA
I2C_1_SCL	I2C_SCL		ARD_AD5_SCL	AD5, SCL
I2S1_SD_IN	GPIO_29		ARD_GPIO8	GPIO
GPIO_12	PWM2		ARD_GPIO9	PWM
GPIO_11_ACPU_BOOT_MODE	SPI1_CS, PWM5	APPS BOOT	ARD_SS	PWM, SPI_CS
GPIO_10	SPI1_MOSI, PWM4		ARD_MOSI	PWM, SPI_MOSI
GPIO_8_TAP_SEL	SPI1_MISO, PWM2		ARD_MISO	SPI_MISO
GPIO_9_USB_SEL	SPI1_CLK, PWM3		ARD_SCK	SPI_SCK
GND	GND		GND	GND
N/A (supplied off eval board)	N/A (supplied off eval board)		ARD_AREF	POWER
I2C_1_SDA	I2C_SDA		ARD_AD4_SDA	AD4, SDA
I2C_1_SCL	I2C_SCL		ARD_AD5_SCL	AD5, SCL
NC	NC		ARD_NC	NC
N/A (supplied off eval board)	N/A (supplied off eval board)		ARD_IOREF	POWER
RESET_L	RESET		ARD_RESET	RESET
N/A (supplied off eval board)	N/A (supplied off eval board)		+3V3	POWER
N/A (supplied off eval board)	N/A (supplied off eval board)		NC	POWER
GND	GND		GND	GND
GND	GND		GND	GND
N/A (supplied off eval board)	N/A (supplied off eval board)		VIN_EXT	POWER

BCM43907-based SiP Pin Name	On Board Debug Interface
GPIO2_JTAG_TCK	GPIO2_JTAG_TCK
GPIO3_JTAG_TMS	GPIO3_JTAG_TMS
GPIO4_JTAG_TDI	GPIO4_JTAG_TDI
GPIO5_JTAG_TDO	GPIO5_JTAG_TDO
GPIO6_JTAG_TRST_N	GPIO6_JTAG_TRST_N
RF_SW_CTRL_7_RSRC_INIT_MODE_UART1_TX_OUT	RF_SW_CTRL_7_UART1_TXD
RF_SW_CTRL_6_UART1_RX_IN	RF_SW_CTRL_6_UART1_RXD

WICED / ARDUINO HEADER PAIRS

Broadcom

Company Confidential

SIZE	TITLE	
B	BCM943907AEVAL1F_1	
DATE 16/10/2015:10:49		SHEET 2 OF 10

2.1mm DC Jack (centre pin positive)
Typ.= 5Vdc to12Vdc
(Min.= 4.5Vdc)
(Max.= 15Vdc)

+3V3 Supply

Current monitored +3V3 supply for BCM43907 SiP

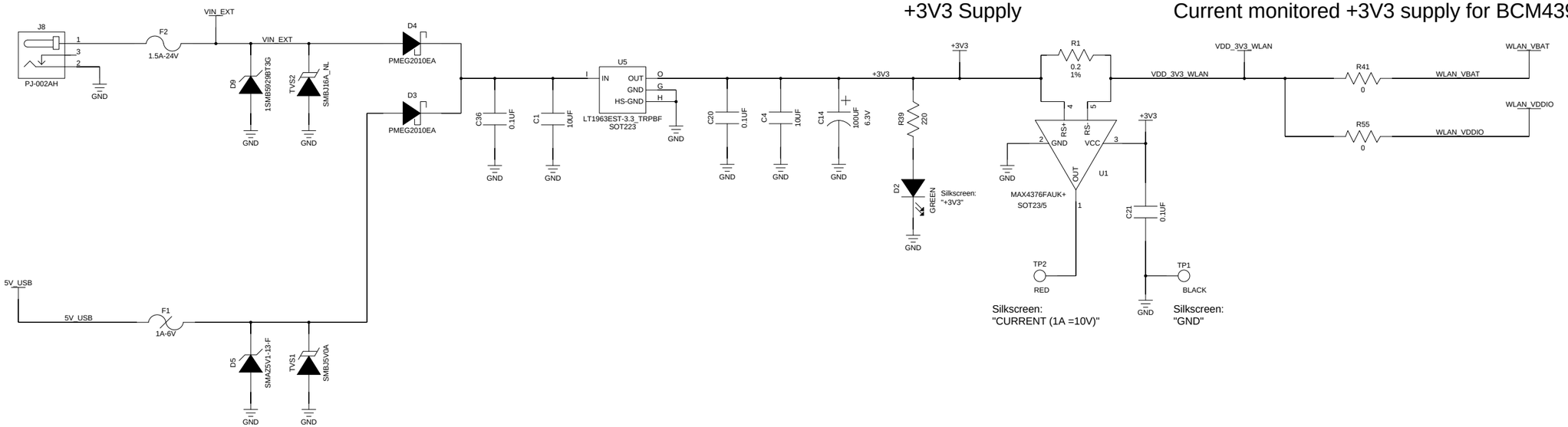

POWER

Broadcom Company Confidential			
SIZE B	TITLE BCM943907AEVAL1F_1		
DATE 16/10/2015:10:49		SHEET 3 OF 10	

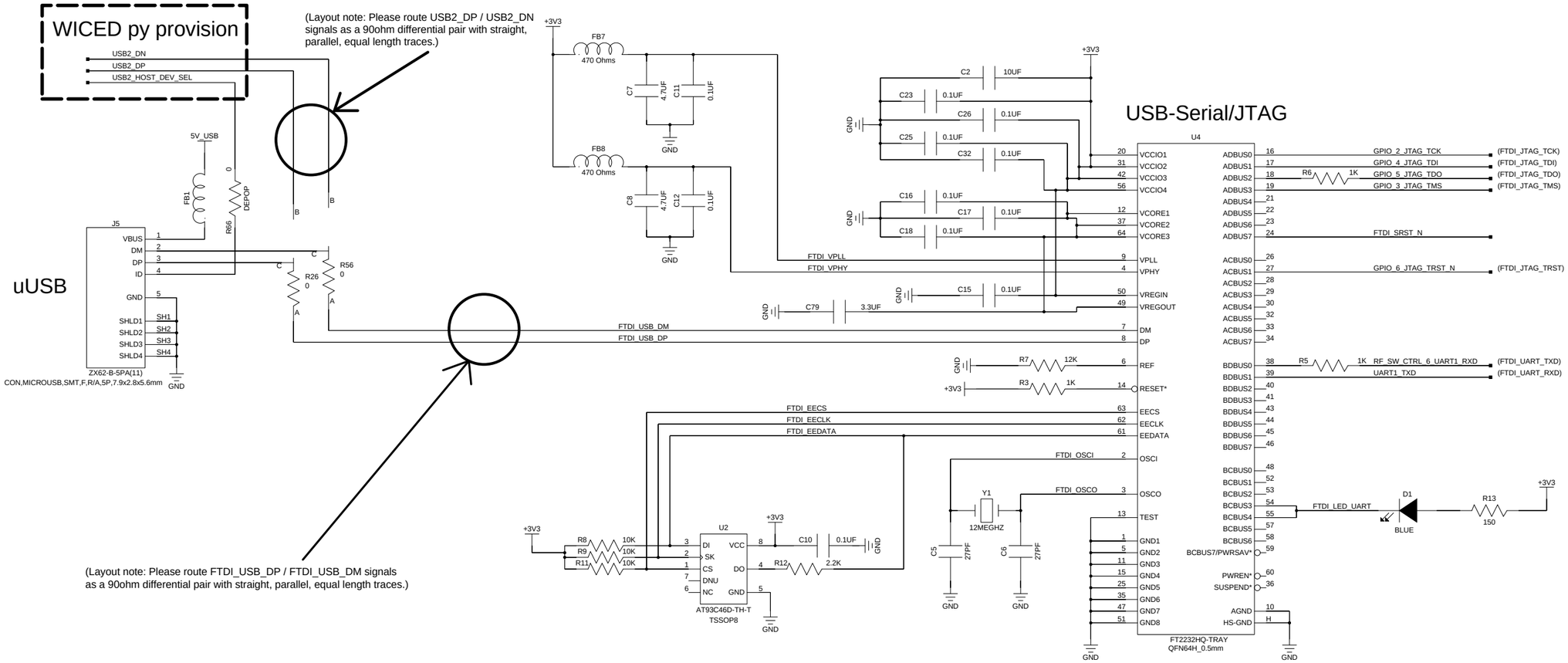

PROGRAM / DEBUG INTERFACE, RESET

Broadcom

Company Confidential

SIZE	TITLE
B	BCM943907AEVAL1F_1

DATE	16/10/2015:10:49	SHEET	4 OF 10

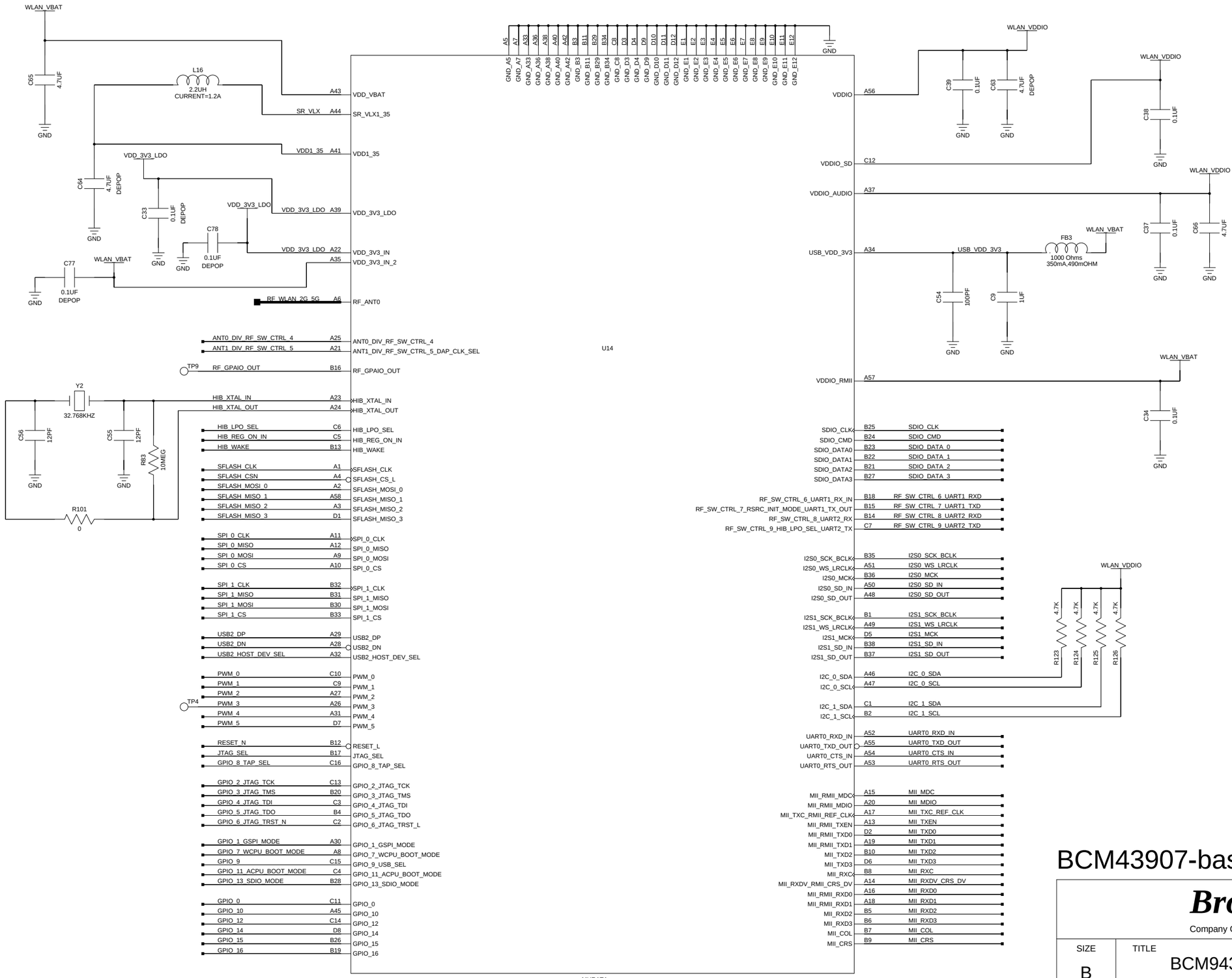

BCM43907-based SiP (10mm x 10mm)

Broadcom

Company Confidential

SIZE	TITLE	
B	BCM943907AEVAL1F_1	
DATE 28/10/2015:14:18	SHEET 5 OF 10	

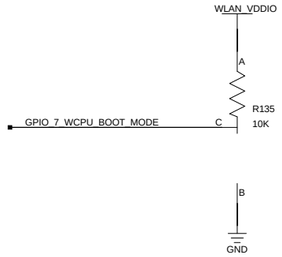

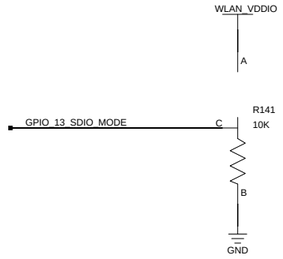

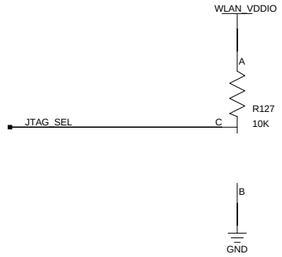

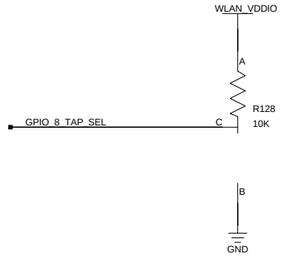

Pin	Strap Function	Strap Pull	
		Chip Default	Board Default
GPIO_1	gSPI Mode	0	0
GPIO_7	WCPU Boot Mode : 0 = TCROM Boot 1 = TCMSRAM Boot	0	1 R135 = 10K to WLAN_VDDIO
GPIO_11	ACPU Boot Mode : 0 = SOCROM Boot 1 = SOCSRAM Boot	0	0
GPIO_13	SDIO Mode : 0 = SDIO Device 1 = SDIO Host	0	0 R141= 10K to GND
GPIO_15	(Note: GPIO_15 is not a strap option for B0 IC)	0	0
RF_SW_CTRL_5	Host DAP Clock Sel	0	0
RF_SW_CTRL_7	Host RSRC Init	0	0
RF_SW_CTRL_9	LPO Sel : 0 = LPO from HIB	0	0

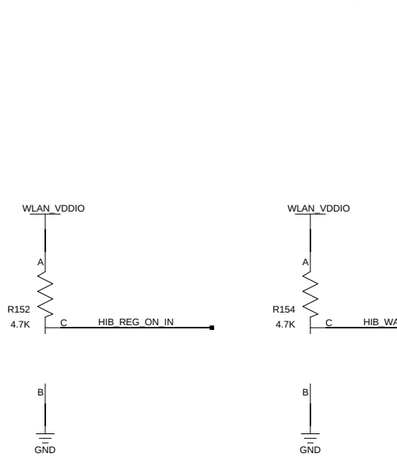

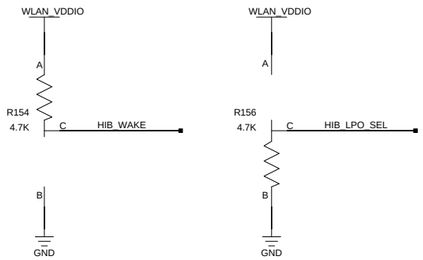

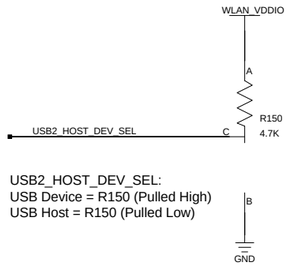

USB2_HOST_DEV_SEL:
USB Device = R150 (Pulled High)
USB Host = R150 (Pulled Low)

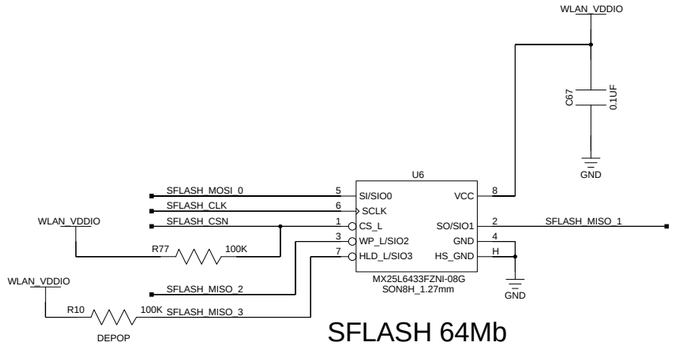

SFLASH 64Mb

BOOTSTRAPS + SFLASH

Broadcom

Company Confidential

SIZE	TITLE	
B	BCM943907AEVAL1F_1	
DATE 16/10/2015:10:49		SHEET 6 OF 10

Note: To bypass the diversity switch depopulate C82, C74 and populate C83, C73

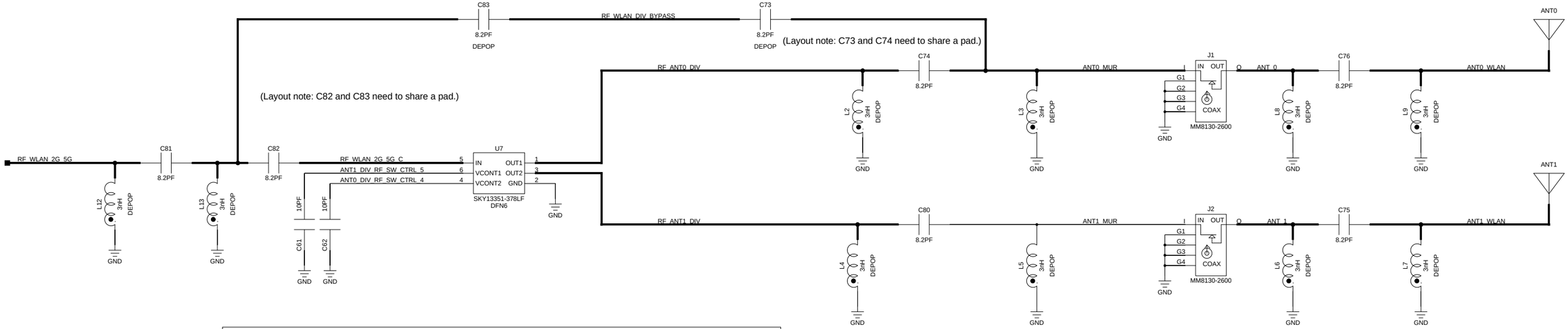

U7 2G/5G SPDT Antenna Diversity Switch Control Table		
MODE OF OPERATION Ant Diversity	ANT0_DIV_RF_SW_CTRL_4 SPDT (U7 Pin 4)	ANT1_DIV_RF_SW_CTRL_5 SPDT (U7 Pin 6)
RF_WLAN_2G_5G to Ant0	1	0
RF_WLAN_2G_5G to Ant1	0	1

ALL OTHER STATES UNDEFINED

RF

Broadcom

Company Confidential

SIZE	TITLE	
B	BCM943907AEVAL1F_1	
DATE 16/10/2015:10:49		SHEET 7 OF 10

Reset Delay

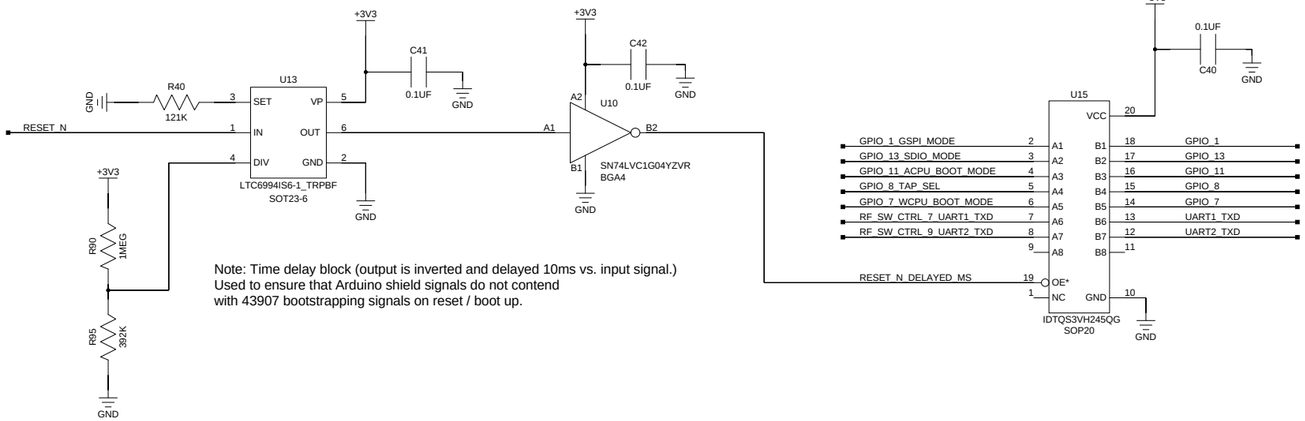

Note: Time delay block (output is inverted and delayed 10ms vs. input signal.)
Used to ensure that Arduino shield signals do not contend
with 43907 bootstrapping signals on reset / boot up.

uSD Connector/Slot

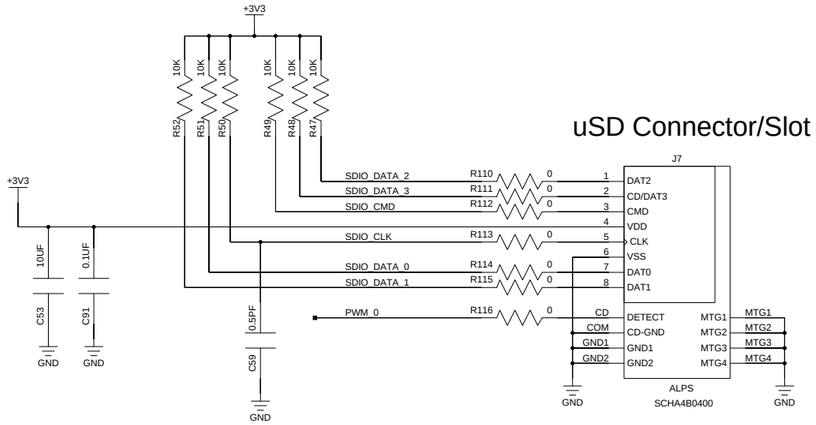

Auth Chip

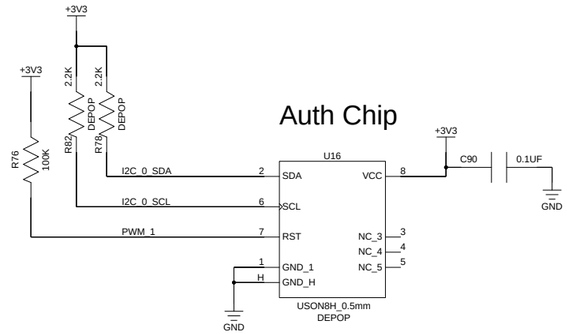

RESET DELAY, AUTH IC, uSD CARD

Broadcom

Company Confidential

SIZE	TITLE	
B	BCM943907AEVAL1F_1	
DATE 16/10/2015:10:49		SHEET 8 OF 10

WICED Header (+3V3 I/O only)

Silkscreen:
"WICED HEADER (+3V3 ONLY)"

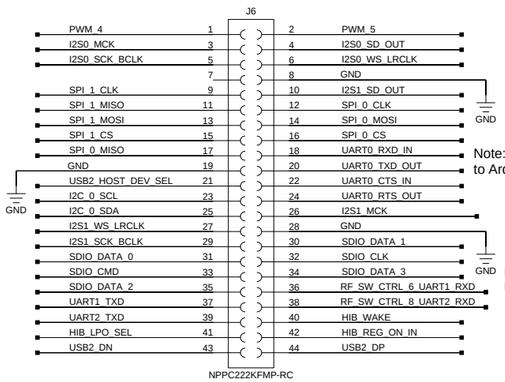

Note: UART0 Tx/Rx may also be used as UART interface to Arduino shields via Arduino header U10.1, U10.2

Note: UART1 is also used for FTDI USB to UART debug interface.

Arduino-compatible Headers (+3V3 I/O only)

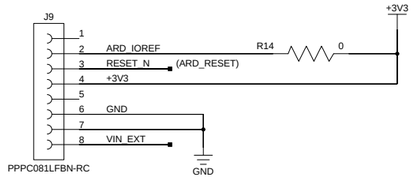

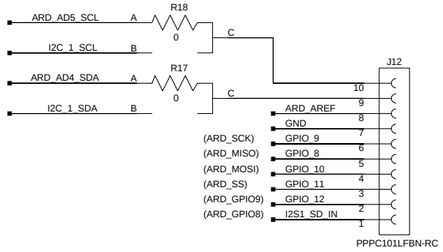

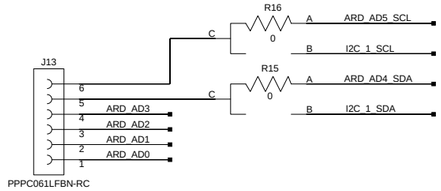

Note: J13.6, J13.5 (by default) are used as ADC inputs. To use as I2C pair or as separate GPIOs please move R15, R16, R17, R18 to position B-C.

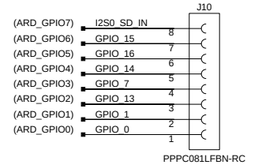

External ADC

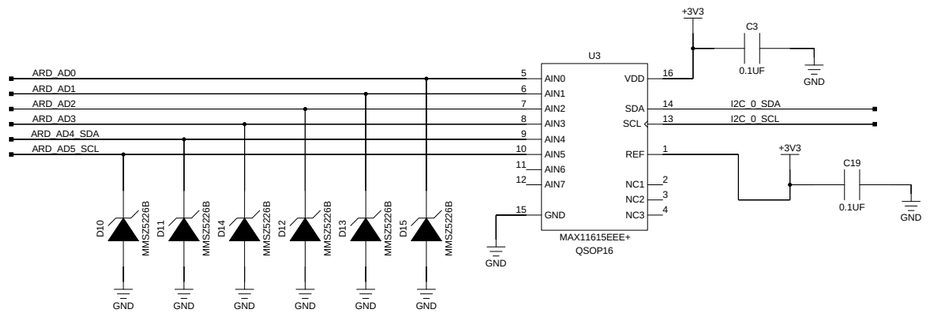

Place acrylic feet at the corners (or as close to) of the board on the bottom layer.
Make sure they to not overlap the edge of the board.

F3
NON PCB MOUNT PART
RUBBER,FEET,9.5X3.8mm,ACRYLIC
TRANSPARENT
SJ5306

F4
NON PCB MOUNT PART
RUBBER,FEET,9.5X3.8mm,ACRYLIC
TRANSPARENT
SJ5306

F5
NON PCB MOUNT PART
RUBBER,FEET,9.5X3.8mm,ACRYLIC
TRANSPARENT
SJ5306

F6
NON PCB MOUNT PART
RUBBER,FEET,9.5X3.8mm,ACRYLIC
TRANSPARENT
SJ5306

ZJ1
NON PCB MOUNT PART
CBL,USB-A/MICROUSB-B,M/M,2ft,4/5P
DATA CABLE,BROADPEBBLE
99-110080-0001

ARDUINO + WICED HEADERS, ADC

Broadcom
Company Confidential

SIZE	TITLE	
B	BCM943907AEVAL1F_1	
DATE 16/10/2015:10:53	SHEET 9	OF 10

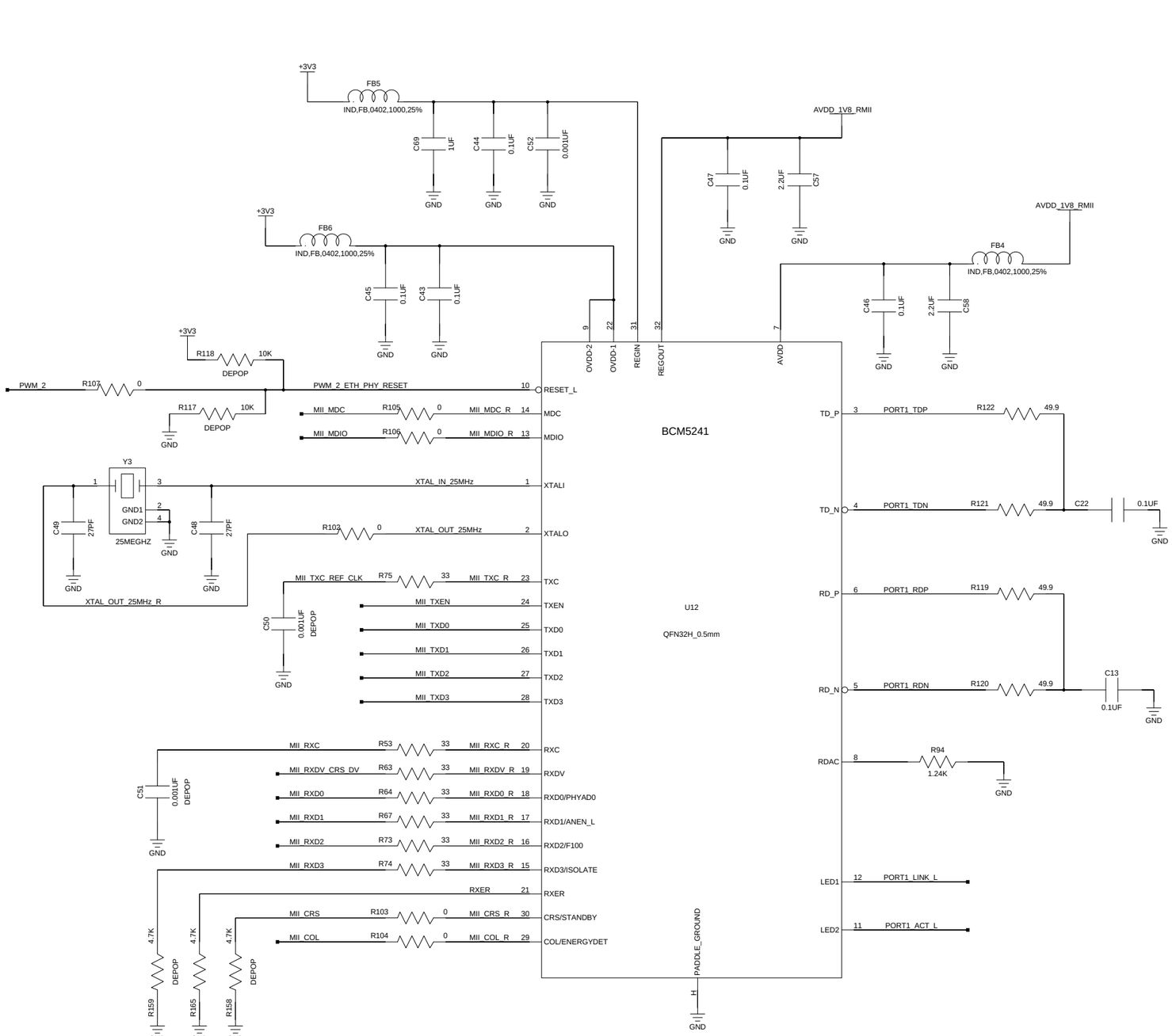

MII

Broadcom

Company Confidential

SIZE	TITLE	
B	BCM943907AEVAL1F_1	
DATE 16/10/2015:10:49		SHEET 10 OF 10