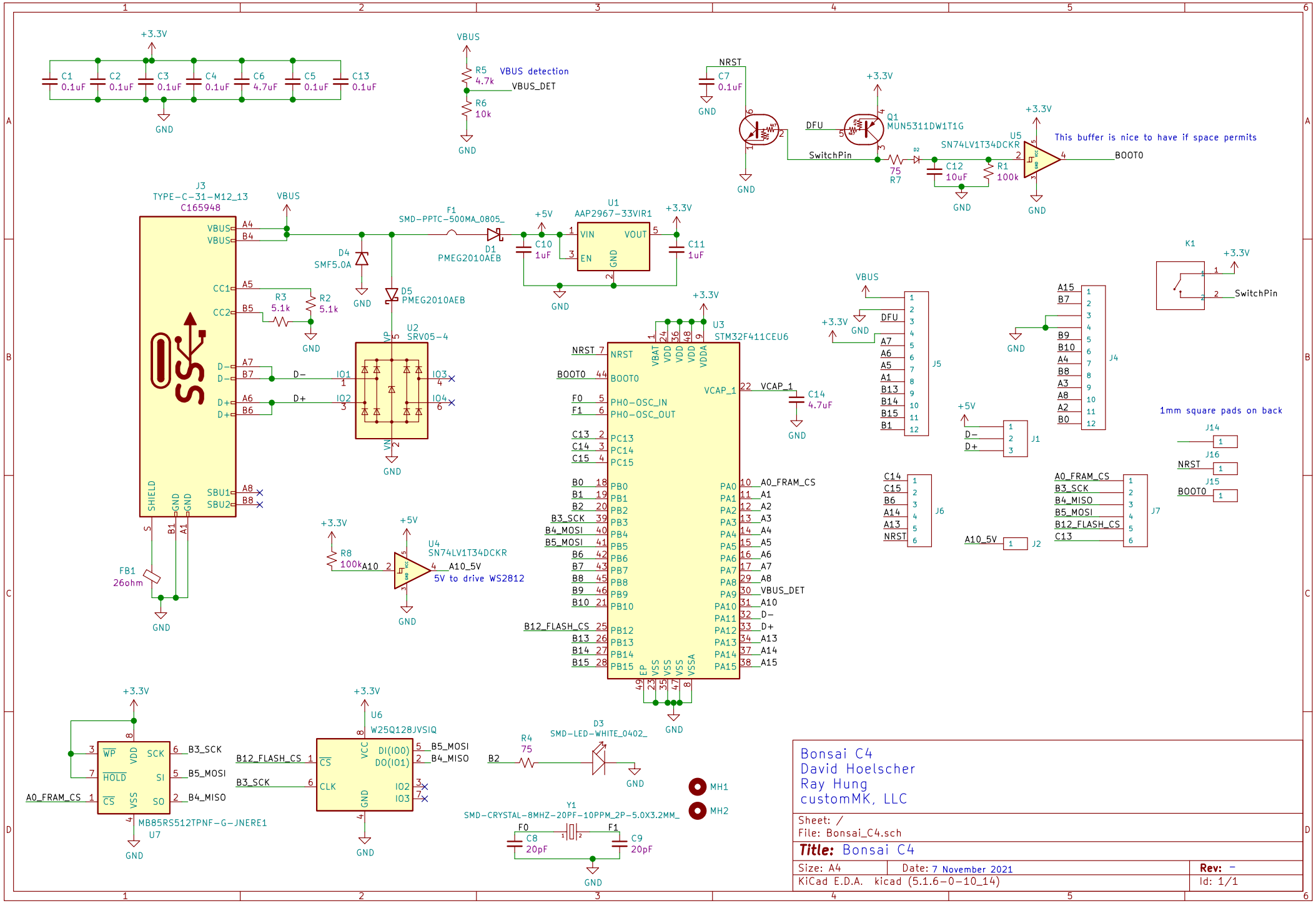

Bonsai C4
David Hoelscher
Ray Hung
customMK, LLC

Sheet: /
File: Bonsai_C4.sch

Title: Bonsai C4

Size: A4	Date: 7 November 2021	Rev: –
KiCad E.D.A. kicad (5.1.6-0-10_14)		Id: 1/1