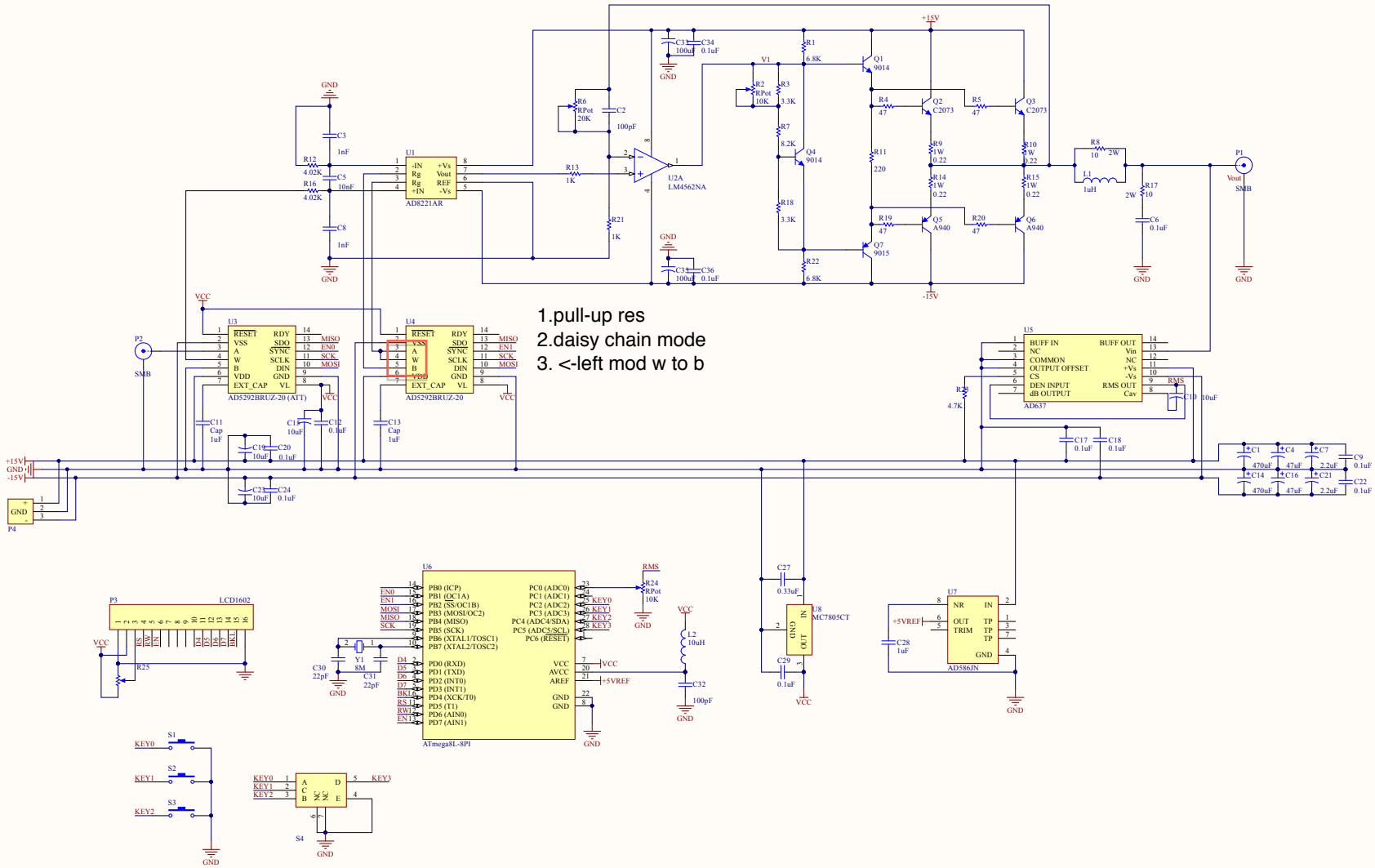

Title		
Size C	Number	Revision
Date: 11/24/2013		Sheet of
File: C:\Users\..\main.SchDoc		Drawn By: