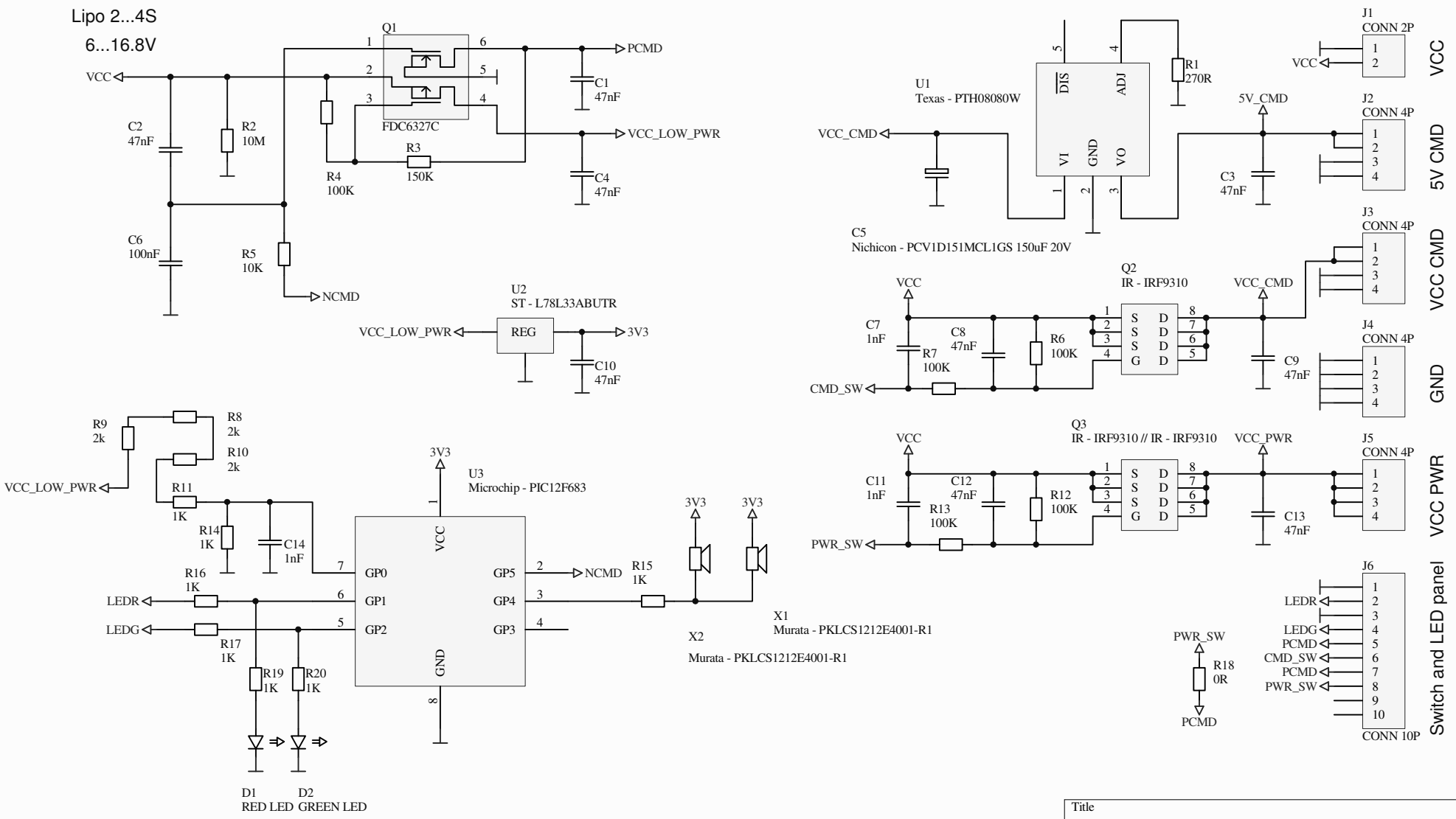

Title		
Size A4	Number	Revision
Date: 02.05.2012	Sheet of	
File: C:\Documents and Settings\..\LipoProt_V2.SchDoc	Drawn By:	