Physics-Infused Reduced-Order Modeling of Hypersonic Thermal Protection Systems With Unknown Contact Resistances

1 Conventional lumped-capacitance model

Consider the lumped-mass average temperature state,

$$\mathbf{u} = [u_1, u_2, u_3, u_4]^T \in \mathbb{R}^N \tag{1}$$

and temperature-dependent lumped-capacitance matrix,

$$A(\mathbf{u}) = \begin{bmatrix} a_1(u_1) & 0 & 0 & 0 \\ 0 & a_2(u_2) & 0 & 0 \\ 0 & 0 & a_3(u_3) & 0 \\ 0 & 0 & 0 & a_4(u_4) \end{bmatrix} \tag{2}$$

Let the external Neumann forcing be applied to the first lumped mass,

$$\mathbf{f}(t) = \begin{bmatrix} f(t) \\ 0 \\ 0 \\ 0 \end{bmatrix} \tag{3}$$

For interfaces $i = 1, 2, 3$, define the known *bulk resistances*

$$S_i(\mathbf{u}) = R_i^-(\mathbf{u}) + R_i^+(\mathbf{u}) \tag{4}$$

and the unknown contact resistance,

$$R_{xi} > 0, \qquad g_{xi} := \frac{1}{R_{xi}}. \tag{5}$$

The classical lumped-capacitance model with effective series resistances is,

$$A(\mathbf{u})\,\dot{\mathbf{u}} = B(\mathbf{u})\,\mathbf{u} + \mathbf{f}(t) \tag{6}$$

where,

$$B(\mathbf{u}) = \sum_{i=1}^{N-1} \frac{1}{S_i(\mathbf{u}) + R_{xi}} \mathbf{K}_i \tag{7}$$

with standard nearest-neighbor diffusion stencils,

$$\mathbf{K}_1 = \begin{bmatrix} 1 & -1 & 0 & 0 \\ -1 & 1 & 0 & 0 \\ 0 & 0 & 0 & 0 \\ 0 & 0 & 0 & 0 \end{bmatrix}, \mathbf{K}_2 = \begin{bmatrix} 0 & 0 & 0 & 0 \\ 0 & 1 & -1 & 0 \\ 0 & -1 & 1 & 0 \\ 0 & 0 & 0 & 0 \end{bmatrix}, \mathbf{K}_3 = \begin{bmatrix} 0 & 0 & 0 & 0 \\ 0 & 0 & 0 & 0 \\ 0 & 0 & 1 & -1 \\ 0 & 0 & -1 & 1 \end{bmatrix} \tag{8}$$

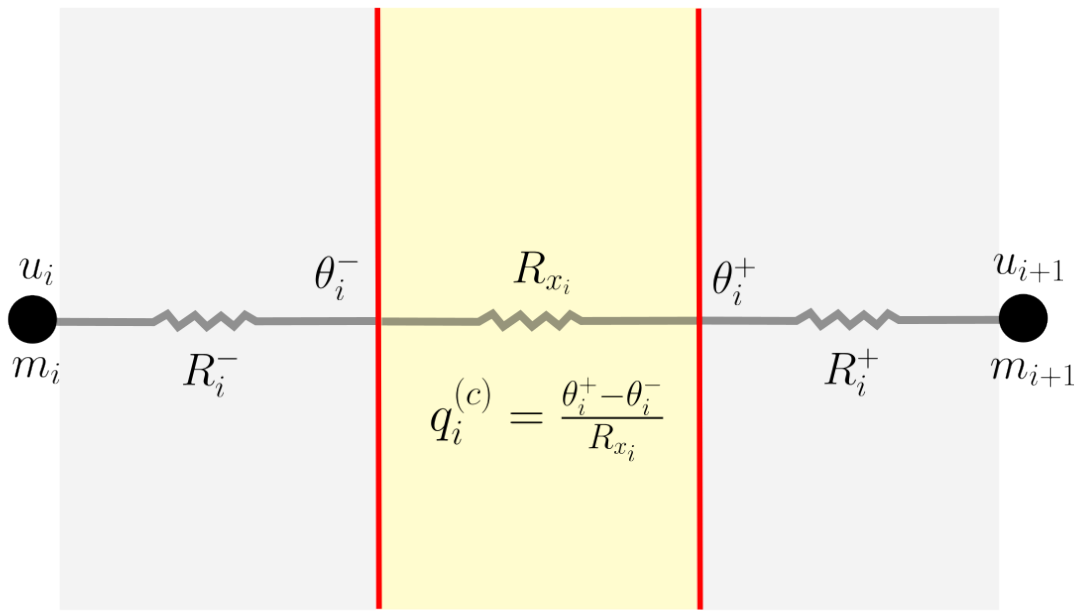

The effective heat flux through interface i is therefore,

$$q_i = \frac{u_{i+1} - u_i}{S_i(\mathbf{u}) + R_{xi}} \tag{9}$$

where the temperature-drop convention is always taken as,

$$\Delta u_i = u_{i+1} - u_i \tag{10}$$

2 Total drop = bulk drop + contact drop

To separate bulk and contact contributions, introduce interface temperatures

$$\theta_i^+, \qquad \theta_i^-, \qquad i = 1, 2, 3, \tag{11}$$

where θ_i^- and θ_i^+ are the temperatures immediately to the left and right of contact i, respectively. Define the contact temperature jumps as,

$$\Delta\theta_i := \theta_i^+ - \theta_i^-, \qquad i = 1, 2, 3 \tag{12}$$

The total lumped-to-lumped temperature drop across interface i,

$$u_{i+1} - u_i \tag{13}$$

This total lumped-to-lumped temperature drop is the sum of the bulk drop across the interface and the contact jump across the interface,

$$\underbrace{u_{i+1} - u_i}_{\text{total drop}} = \underbrace{\left(\theta_i^- - u_i\right) + \left(u_{i+1} - \theta_i^+\right)}_{\text{bulk drop}} + \underbrace{\left(\theta_i^+ - \theta_i^-\right)}_{\text{contact drop}}. \tag{14}$$

Hence,

$$\underbrace{\left(\theta_i^- - u_i\right) + \left(u_{i+1} - \theta_i^+\right)}_{\text{bulk drop}} = \underbrace{(u_{i+1} - u_i)}_{\text{total drop}} - \underbrace{\Delta\theta_i}_{\text{contact drop}} \tag{15}$$

$$\text{bulk drop across interface } i = (u_{i+1} - u_i) - \Delta\theta_i. \tag{16}$$

Thus the lifted state is

$$x = \begin{bmatrix} u \\ \Delta\boldsymbol{\theta} \end{bmatrix} = \begin{bmatrix} u_1 \\ u_2 \\ u_3 \\ u_4 \\ \Delta\theta_1 \\ \Delta\theta_2 \\ \Delta\theta_3 \end{bmatrix} \in \mathbb{R}^7, \qquad \Delta\boldsymbol{\theta} = \begin{bmatrix} \Delta\theta_1 \\ \Delta\theta_2 \\ \Delta\theta_3 \end{bmatrix}.$$

3 Heat-flux Continuity and DAE Formulation

Using the adopted convention, define the bulk and contact heat fluxes as

$$q_i^{(b)} = \frac{(u_{i+1} - u_i) - \Delta\theta_i}{S_i(u)}, \qquad q_i^{(c)} = \frac{\Delta\theta_i}{R_{xi}} = g_{xi}\Delta\theta_i. \tag{17}$$

Heat-flux continuity across each interface requires

$$q_i^{(b)} = q_i^{(c)}, \qquad i = 1, 2, 3, \tag{18}$$

which yields the algebraic constraints

$$\frac{(u_{i+1} - u_i) - \Delta\theta_i}{S_i(u)} - g_{xi}\Delta\theta_i = 0, \qquad i = 1, 2, 3. \tag{19}$$

Lumped-temperature dynamics

The four lumped energy balances yield,

$$a_1(u_1)\dot{u}_1 = f(t) - q_{12}^{(b)} \tag{20a}$$

$$a_2(u_2)\dot{u}_2 = q_{12}^{(b)} - q_{23}^{(b)} \tag{20b}$$

$$a_3(u_3)\dot{u}_3 = q_{23}^{(b)} - q_{34}^{(b)} \tag{20c}$$

$$a_4(u_4)\dot{u}_4 = q_{34}^{(b)} \tag{20d}$$

Substituting using the bulk heat fluxes yields,

$$a_1(u_1)\dot{u}_1 = f(t) - \frac{(u_2 - u_1) - \Delta\theta_1}{S_1(u)} \tag{21a}$$

$$a_2(u_2)\dot{u}_2 = \frac{(u_2 - u_1) - \Delta\theta_1}{S_1(u)} - \frac{(u_3 - u_2) - \Delta\theta_2}{S_2(u)} \tag{21b}$$

$$a_3(u_3)\dot{u}_3 = \frac{(u_3 - u_2) - \Delta\theta_2}{S_2(u)} - \frac{(u_4 - u_3) - \Delta\theta_3}{S_3(u)} \tag{21c}$$

$$a_4(u_4)\dot{u}_4 = \frac{(u_4 - u_3) - \Delta\theta_3}{S_3(u)} \tag{21d}$$

Matrix form of DAE

Define the difference matrix,

$$\mathbf{D} = \begin{bmatrix} -1 & 1 & 0 & 0 \\ 0 & -1 & 1 & 0 \\ 0 & 0 & -1 & 1 \end{bmatrix}, \ \mathbf{D}u = \begin{bmatrix} u_2 - u_1 \\ u_3 - u_2 \\ u_4 - u_3 \end{bmatrix} \tag{22}$$

Define the bulk temperature stencils,

$$\mathbf{K}_1 = \begin{bmatrix} 1 & -1 & 0 & 0 \\ -1 & 1 & 0 & 0 \\ 0 & 0 & 0 & 0 \\ 0 & 0 & 0 & 0 \end{bmatrix}, \ \mathbf{K}_2 = \begin{bmatrix} 0 & 0 & 0 & 0 \\ 0 & 1 & -1 & 0 \\ 0 & -1 & 1 & 0 \\ 0 & 0 & 0 & 0 \end{bmatrix}, \ \mathbf{K}_3 = \begin{bmatrix} 0 & 0 & 0 & 0 \\ 0 & 0 & 0 & 0 \\ 0 & 0 & 1 & -1 \\ 0 & 0 & -1 & 1 \end{bmatrix} \tag{23}$$

and the bulk jump-coupling stencils,

$$\mathbf{L}_1 = \begin{bmatrix} 1 & 0 & 0 \\ -1 & 0 & 0 \\ 0 & 0 & 0 \\ 0 & 0 & 0 \end{bmatrix}, \ \mathbf{L}_2 = \begin{bmatrix} 0 & 0 & 0 \\ 0 & 1 & 0 \\ 0 & -1 & 0 \\ 0 & 0 & 0 \end{bmatrix}, \ \mathbf{L}_3 = \begin{bmatrix} 0 & 0 & 0 \\ 0 & 0 & 0 \\ 0 & 0 & 1 \\ 0 & 0 & -1 \end{bmatrix} \tag{24}$$

Then,

$$A(u)\dot{u} = \sum_{i=1}^{N-1} \frac{1}{S_i(u)} \Big(\mathbf{K}_i u + \mathbf{L}_i \Delta\boldsymbol{\theta} \Big) + \mathbf{f}(t) \tag{25}$$

and the algebraic constraints for heat flux continuity are written as,

$$\mathrm{diag}\left(\frac{1}{S_1(u)}, \frac{1}{S_2(u)}, \frac{1}{S_3(u)} \right) \mathbf{D}u - \left[\mathrm{diag}\left(\frac{1}{S_1(u)}, \frac{1}{S_2(u)}, \frac{1}{S_3(u)} \right) + G_x \right] \Delta\boldsymbol{\theta} = 0 \tag{26}$$

where

$$G_x = \begin{bmatrix} g_{x1} & 0 & 0 \\ 0 & g_{x2} & 0 \\ 0 & 0 & g_{x3} \end{bmatrix} \tag{27}$$

Equation (26), along with the lumped-temperature dynamics, defines a DAE system for the lifted state $x = [u, \Delta\boldsymbol{\theta}]$.

4 DAE index reduction

The DAE is index-reduced by differentiating the heat-flux continuity constraints with respect to time, which, for each interface i, yields,

$$\frac{d}{dt} \left[\frac{(u_{i+1} - u_i) - \Delta\theta_i}{S_i(u)} - g_{xi} \Delta\theta_i \right] = 0 \tag{28}$$

The contact conductances g_{xi} are assumed constant, therefore,

$$\big(1 + g_{xi} S_i(u)\big) \Delta\dot{\theta}_i = \big(\dot{u}_{i+1} - \dot{u}_i\big) - \frac{(u_{i+1} - u_i) - \Delta\theta_i}{S_i(u)} \dot{S}_i(u) \tag{29}$$

Using the original algebraic constraint

$$\frac{(u_{i+1} - u_i) - \Delta\theta_i}{S_i(u)} = g_{xi}\Delta\theta_i, \tag{30}$$

the index-reduced dynamics become,

$$\boxed{\Delta\dot{\theta}_i = \frac{\dot{u}_{i+1} - \dot{u}_i - g_{xi}\Delta\theta_i\,\dot{S}_i(u)}{1 + g_{xi}S_i(u)}, \qquad i = 1, 2, 3} \tag{31}$$

Define

$$M(u; R_x) = \begin{bmatrix} 1 + g_{x1}S_1(u) & 0 & 0 \\ 0 & 1 + g_{x2}S_2(u) & 0 \\ 0 & 0 & 1 + g_{x3}S_3(u) \end{bmatrix} \tag{32}$$

and,

$$\dot{S}(u) = \begin{bmatrix} \dot{S}_1(u) \\ \dot{S}_2(u) \\ \dot{S}_3(u) \end{bmatrix}, \qquad \Delta\boldsymbol{\theta} \odot \dot{S}(u) = \begin{bmatrix} \Delta\theta_1\dot{S}_1(u) \\ \Delta\theta_2\dot{S}_2(u) \\ \Delta\theta_3\dot{S}_3(u) \end{bmatrix} \tag{33}$$

Then, the index-reduced dynamics for the contact jumps can be written in matrix form as,

$$M(u; R_x)\Delta\dot{\theta} = D\,\dot{u} - G_x\big(\Delta\boldsymbol{\theta} \odot \dot{S}(u)\big) \tag{34}$$

Thus, the index-reduced lifted system is given by the coupled ODEs,

$$A(u)\dot{u} = \sum_{i=1}^{N-1} \frac{1}{S_i(u)}\Big(\mathbf{K}_i u + \mathbf{L}_i\Delta\boldsymbol{\theta}\Big) + \mathbf{f}(t) \tag{35a}$$

$$M(u; R_x)\Delta\dot{\theta} = \mathbf{D}\dot{u} - G_x\big(\Delta\boldsymbol{\theta} \odot \dot{S}(u)\big) \tag{35b}$$

5 Bulk-only Mori–Zwanzig Memory Closure

The purpose of the closure is to modify only the *bulk conductances* in the lumped-capacitance model, while leaving the contact-jump dynamics unchanged. Accordingly, write the Projected Generalized Langevin Equation (PGLE) for the lumped-temperature dynamics,

$$A(\mathbf{u})\dot{\mathbf{u}} = \sum_{i=1}^{N-1} \frac{1}{S_i(\mathbf{u})}\left(\mathbf{K}_i u + \mathbf{L}_i\Delta\boldsymbol{\theta}\right) + \mathbf{f}(t) + \int_{t_0}^{t} \boldsymbol{\kappa}(t, s, u, \mathbf{f}; \Theta)ds \tag{36}$$

Now, ensure the designed memory modifies only the bulk conductances, i.e.,

$$\boldsymbol{\kappa} \in \operatorname{span}\{\mathbf{K}_1 u(t), \mathbf{K}_2 u(t), \mathbf{K}_3 u(t), \mathbf{L}_1\Delta\boldsymbol{\theta}_1(t), \mathbf{L}_2\Delta\boldsymbol{\theta}_2(t), \mathbf{L}_3\Delta\boldsymbol{\theta}_3(t)\} \tag{37}$$

which leads to,

$$\boldsymbol{\kappa}(t, s, u, \mathbf{f}; \Theta) \approx \sum_{j=1}^{m} \kappa_j(t, s, u, \mathbf{f}; \Theta)\boldsymbol{\mathcal{P}}_j \tag{38}$$

where,

$$\boldsymbol{\mathcal{P}}_j = \sum_{i=1}^{N-1} \frac{1}{S_i(u)}\mathbf{p}_{ij} \tag{39}$$

Now, define the memory variables as,

$$\beta_j(t) = \int_{t_0}^{t} \kappa_j(t, s, u, \mathbf{f}; \Theta) ds \tag{40}$$

then,

$$\int_{t_0}^{t} \boldsymbol{\kappa}(t, s, u, \mathbf{f}; \Theta) ds = \sum_{j=1}^{m} \beta_j(t) \boldsymbol{\mathcal{P}}_j \tag{41}$$

It follows that,

$$\sum_{j=1}^{m} \beta_j(t) \boldsymbol{\mathcal{P}}_j = \sum_{j=1}^{m} \beta_j(t) \sum_{i=1}^{N-1} \frac{1}{S_i(u)} \mathbf{p}_{ij} = \sum_{i=1}^{N-1} \frac{1}{S_i(u)} \left(\sum_{j=1}^{m} \mathbf{p}_{ij} \beta_j(t) \right) = \sum_{i=1}^{N-1} \frac{1}{S_i(u)} \mathbf{P}_i \boldsymbol{\beta} \tag{42}$$

Then, the memory correction to the LCM dynamics leads to the following modified lumped-temperature dynamics,

$$A(\mathbf{u})\dot{\mathbf{u}} = \sum_{i=1}^{N-1} \frac{1}{S_i(\mathbf{u})} \left(\mathbf{K}_i u + \mathbf{L}_i \Delta \boldsymbol{\theta} + \mathbf{P}_i \boldsymbol{\beta} \right) + \mathbf{f}(t) \tag{43}$$

Now, let,

$$\kappa_i \left(t, s, \mathbf{u}, \mathbf{f}; \Theta \right) = e^{-\lambda_j (t-s)} \left(q_j^\top \phi(\mathbf{u}(s)) + r_j^\top \psi(\mathbf{f}(s)) \right) \tag{44}$$

such that the memory variables are given by,

$$\boldsymbol{\beta}(t) = \int_{t_0}^{t} e^{-\Lambda (t-s)} \left(Q^\top \phi(\mathbf{u}(s)) + R^\top \psi(\mathbf{f}(s)) \right) ds \tag{45}$$

The hidden dynamics are now given by,

$$\dot{\boldsymbol{\beta}} = -\Lambda \boldsymbol{\beta} + Q^\top \phi(\mathbf{u}) + R^\top \psi(\mathbf{f}) \tag{46}$$

and in state-space form, the hidden dynamics are,

$$\dot{\boldsymbol{\beta}} = -\Lambda \boldsymbol{\beta} + Q^\top \phi(\mathbf{u}) + R^\top \psi(\mathbf{f}) \tag{47}$$

The full lifted and closed system is given by,

$$A(\mathbf{u})\dot{\mathbf{u}} = \sum_{i=1}^{N-1} \frac{1}{S_i(\mathbf{u})} \left(\mathbf{K}_i \mathbf{u} + \mathbf{L}_i \Delta \boldsymbol{\theta} + \mathbf{P}_i \boldsymbol{\beta} \right) + \mathbf{f}(t) \tag{48a}$$

$$M(\mathbf{u}; R_x) \dot{\Delta \boldsymbol{\theta}} = \mathbf{D} \dot{\mathbf{u}} - G_x \big(\Delta \boldsymbol{\theta} \odot \dot{S}(\mathbf{u}) \big) \tag{48b}$$

$$\dot{\boldsymbol{\beta}} = -\Lambda \boldsymbol{\beta} + Q^\top \phi(\mathbf{u}) + R^\top \psi(\mathbf{f}) \tag{48c}$$

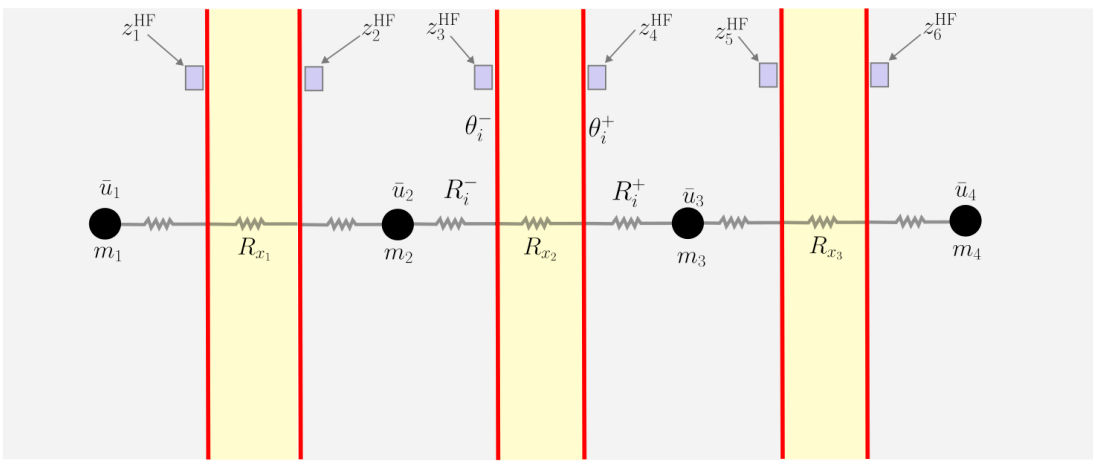

$$q_i^{(c)} = \frac{\theta_i^+ - \theta_i^-}{R_{x_i}}$$