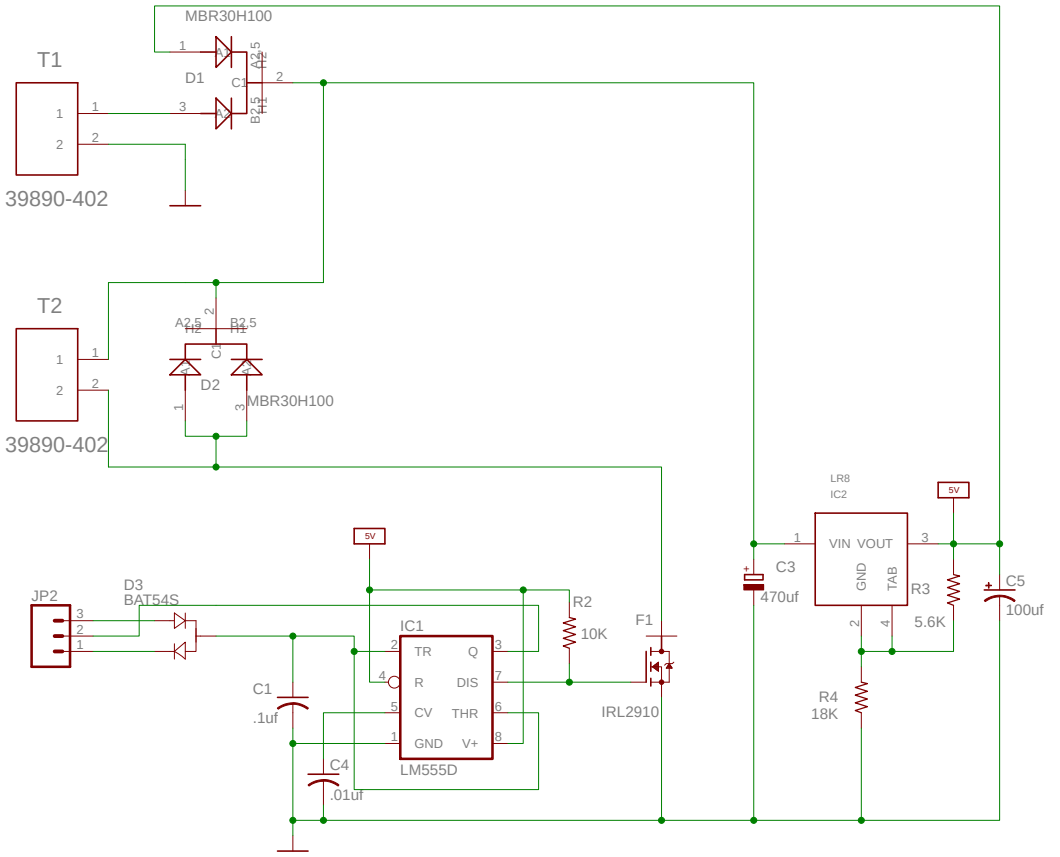

TITLE:	PWM Motor Controller (9-90VDC)
Document Number:	REV: A
Date: 10/27/2019	Sheet: 1 of 1